杰牌官方微信
JIE Wechat

杰牌官方网站
JIE Website

杰牌官方视频
JIE Video

杰牌始创于1988年，坚持100年做好一台智能齿轮减速电机，匠心打造中国世界品牌。杰牌传动是杰牌控股全资子公司，杰牌美国是杰牌传动全资子公司，是国家重点“小巨人”企业、浙江省重点企业研究院，浙江省“未来工厂”企业。杰牌聚焦传动技术、驱动技术、控制技术、软件技术和未来技术，包括减速机、电动机、变频器、传感器、物联网等智能传动方案，执行层、采集层、驱动层、控制层、数据层等数字智能技术，立足中国市场、服务全球市场，杰牌为全球好客户做好产品。杰牌坚持三化“专业化、智能化、全球化”，致力于杰牌智能传动“研究院+创新中心+未来工厂”创新发展模式，打造百年杰牌，成就幸福家庭。杰牌智能传动方案提供商！

Established in 1988, JIE has been insisting on manufacturing a great intelligent reducer in 100 years, aiming to build a Chinese world brand with its craftsmanship. JIE Drive, as the wholly-owned subsidiary of JIE Holdings, with a wholly-owned subsidiary JIE USA, has been awarded as the “Hidden Champions” in China， Research Institute of Key Enterprises in Zhejiang, “Lighthouse Factory” in Zhejiang. JIE, focuses on the Transmission Technology, Drive Technology, Control Technology, Software Technology and Future Technology, in addition to the intelligent drive solutions incl. gearboxes, motors, inverters, sensors & Internet of Things as well as the digital technologies incl. Execution Layer, Acquisition Layer, Drive Layer, Control Layer & Data Layer. JIE, based on the Chinese market, servers the great customers with great products worldwide.With the core strategy of “Specialization, Intelligence and Globalization”, JIE is dedicated to the Innovate the development model of “Research Institute + Innovation Center + Intelligent Factory”, to build a century-old JIE and achieve more happy families.JIE, a provider of Intelligent Drive Solutions!

杭州杰牌传动科技有限公司
HANG ZHOU JIE DRIVE TECHNOLOGY CO.,LTD.

地址 ：中国浙江·杭州临空经济示范区·杰牌路1号
邮编 ：311223
Add. ：No.1, JIE Road, Hangzhou Airport Economic Demonstration Zone, 311223, Zhejiang, China.
热线Tel.：0571 8299 1111 400 114 1111
总机Tel.：0571 8299 2222
传真Fax：0571 8299 3333
E-mail ：jie@jie.com.cn
Web. ：www.jiedrive.com www.jie.com.cn

杰牌美国 JIE USA

279 Madsen Dr Suite 101, Bloomingdale, IL 60108
Tel. ：+1 630 580 9986
E-mail: info@jie-drives.com
Web. ：www.jie-drives.com

杰牌欧洲 JIE EURONORM

Hub van Doorneweg 8, 2171 KZ Sassenheim, Netherlands
Tel. ：+31 252 228 850
E-mail：info@jie-euronorm.com
Web. ：www.jie-euronorm.com

蜗杆减速机选型手册

杰牌传动
JIE DRIVE





JRST、WP 高效蜗杆减速机
JRST、WP High–efficiency Worm Reducers

因专业 而杰出
Excellence From Expertise

杰牌智能传动方案提供商

JIE INTELLIGENT DRIVE SOLUTIONS PROVIDER

国家重点“小巨人”企业
浙江省重点企业研究院
浙江省“未来工厂”企业

目 录

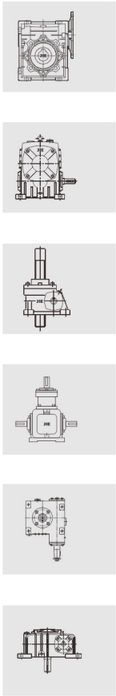

CONTENTS


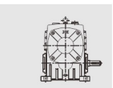
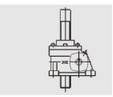

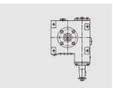
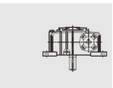

一. 选型步骤-JRST
Selection Guide

1

选择杰牌传动产品
例：JRST蜗杆减速机、JRSTD蜗杆减速机、JRSTB蜗杆减速机、JRSTDB蜗杆减速机等信息。

Select JIE Drive product
Example: Pick the right model,JRST Worm Gearbox ,JRSTD Worm Gearbox ,JRSTB Worm Gearbox ,JRSTDB Worm Gearbox, etc.

2

输入现用产品品牌
例：杰牌传动、欧美日品牌、中国品牌等信息。

Enter current product brand
Example: JIE Drive or competitors.

3

输入现用产品参数
例：JRST蜗杆减速机：25~150，传动比：7.5~100，输入功率：0.06~15kW，输出扭矩：2.6~1760Nm等型号规格信息。

Enter current product specifications
Example: JRST Worm Gearbox, size 25~150, ratio 7.5~100, input power 0.06~15kW, output torque 2.6~2670Nm and other models.

4

生成杰牌产品型号规格
例：JRSTD75-30-80B5,JRST75-30-B3,JRSTD75-30-U-80B5, JRST75-30-W-B3等型号规格信息。

Generate JIE Drive model and specifications
Example: JRSTD75-30-80B5,JRST75-30-B3,JRSTD75-30-U-80B5, JRST75-30-W-B3 with specifications.

5

生成杰牌产品2D/3D图
例：JRSTD75-30-80B5,JRST75-30-B3,JRSTD75-30-U-80B5, JRST75-30-W-B3等产品2D/3D图信息。

Generate 2D/3D drawings of JIE Drive products
Example: 2D/3D drawings of JRSTD75-30-80B5,JRST75-30-B3, JRSTD75-30-U-80B5,JRST75-30-W-B3 and other models.

6

确认技术质量标准
例：技术质量标准按杰牌相关标准和双方协议约定的标准执行，质保期自发货之日起18个月或实际使用之日起12个月，以先到为准等信息确认。

Confirm the technical quality standard
Example: The technical and quality standards shall be implemented according to the relevant standards of JIE Drive and the standards agreed by both parties. The warranty period shall be 12 months after start using products or 18 months after shipment from JIE whichever comes earlier.

7

确认交期服务标准
例：首次合作按双方协议约定时间交货；提供1+3滚动计划时7天交货，包括总用量、年用量、月用量、批用量、试用量；售前服务、售中服务、售后服务和预单管理等信息确认。

Confirm delivery standard
Example: Delivery shall be made according to the time agreed by both parties for the first cooperation;7 days lead time base on 1+3 rolling plan, including total usage, annual usage, monthly usage, batch usage and sample; confirmation of pre-sales service, in-sales service, after-sales service and pre-order management.

8

确认结算价格标准
例：30%定金款到后订单生效，余款款到后发货；价格按双方协议约定的价格执行等信息确认。

Confirm the settlement price standard
Example: The order comes into effective after 30% deposition received and products will be delivered after balance payment; price shall be subject to agreed upon both parties.

9

确认产品订单信息
例：产品名称、型号规格、技术参数、订单数量、产品颜色、包装形式、运输方式、下单时间、交付时间、交付地点、收货单位等信息确认。

Confirm order information
Example: Confirm product type, model, specification; order quantity, color, packaging, transportation, P.O issue time, delivery time, delivery location, receiving company and other order information.

10

确认产品交付信息
例：样机订单交付、小批订单交付、批量订单交付等信息确认。

Confirm product delivery information
Example: Confirm prototype delivery, small batch delivery, batch delivery and other delivery information.

5. 生成杰牌产品2D/3D图
Generate 2D/3D drawing of JIE products

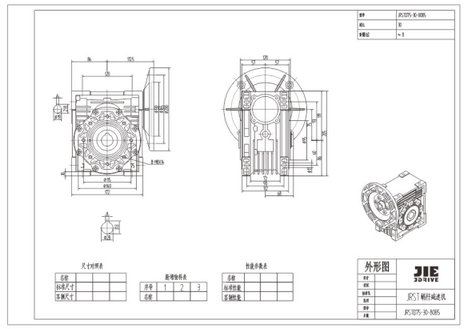
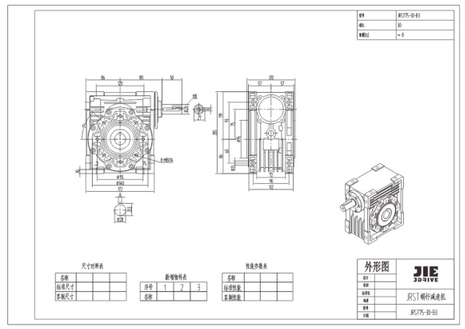
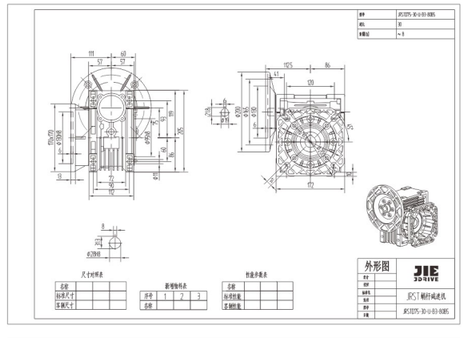
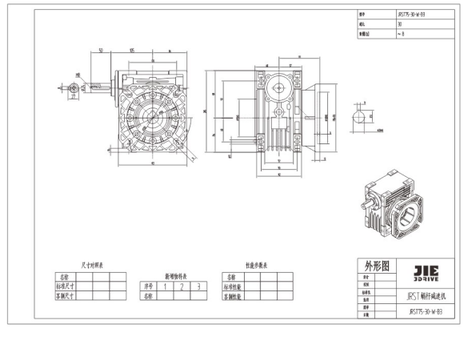


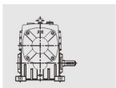
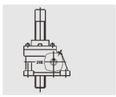

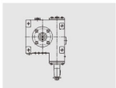
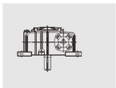


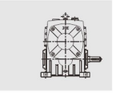
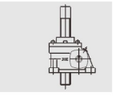

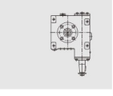
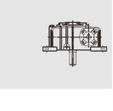

一. 选型步骤-WP
Selection Guide

1

选择杰牌传动产品
例：WP蜗杆减速机、WPD蜗杆减速机、WPW蜗杆减速机、WPWD蜗杆减速机等信息。

Select JIE Drive product
Example: Pick the right model, WP Worm Gearbox, WPD Worm Gearbox , WPW Worm Gearbox, WPWD Worm Gearbox, etc.

2

输入现用产品品牌
例：杰牌传动、欧美日品牌、中国品牌等信息。

Enter current product brand
Example: JIE Drive or competitors.

3

输入现用产品参数
例：WP蜗杆减速机：40~250，传动比：10~80，输入功率：0.12~33.2kW，输出扭矩：19~2745Nm等型号规格信息。

Enter current product specifications
Example: WP Worm Gearbox, size 40~250, ratio 10~80, input power 0.12~33.2kW, output torque 19~2745 Nm and other models.

4

生成杰牌产品型号规格
例：WPA80-30-B，WPDO80-30-B，WPW80-30-A，WPWDKS80-30-A等型号规格信息。

Generate JIE Drive model and specifications
Example: WPA80-30-B，WPDO80-30-B，WPW80-30-A，WPWDKS80-30-A with specifications.

5

生成杰牌产品2D/3D图
例：WPA80-30-B，WPDO80-30-B，WPW80-30-A，WPWDKS80-30-A等产品2D/3D图信息。

Generate 2D/3D drawings of JIE Drive products
Example: 2D/3D drawings of WPA80-30-B，WPDO80-30-B，WPW80-30-A，WPWDKS80-30-A and other models.

6

确认技术质量标准
例：技术质量标准按杰牌相关标准和双方协议约定的标准执行，质保期自发货之日起18个月或实际使用之日起12个月，以先到为准等信息确认。

Confirm the technical quality standard
Example: The technical and quality standards shall be implemented according to the relevant standards of JIE Drive and the standards agreed by both parties. The warranty period shall be 12 months after start using products or 18 months after shipment from JIE whichever comes earlier.

7

确认交期服务标准
例：首次合作按双方协议约定时间交货；提供1+3滚动计划时7天交货，包括总用量、年用量、月用量、批用量、试用量；售前服务、售中服务、售后服务和预单管理等信息确认。

Confirm delivery standard
Example: Delivery shall be made according to the time agreed by both parties for the first cooperation;7 days lead time base on 1+3 rolling plan, including total usage, annual usage, monthly usage, batch usage and sample; confirmation of pre-sales service, in-sales service, after-sales service and pre-order management.

8

确认结算价格标准
例：30%定金款到后订单生效，余款款到后发货；价格按双方协议约定的价格执行等信息确认。

Confirm the settlement price standard
Example: The order comes into effective after 30% deposition received and products will be delivered after balance payment; price shall be subject to agreed upon both parties.

9

确认产品订单信息
例：产品名称、型号规格、技术参数、订单数量、产品颜色、包装形式、运输方式、下单时间、交付时间、交付地点、收货单位等信息确认。

Confirm order information
Example: Confirm product type, model, specification; order quantity, color, packaging, transportation, P.O issue time, delivery time, delivery location, receiving company and other order information.

10

确认产品交付信息
例：样机订单交付、小批订单交付、批量订单交付等信息确认。

Confirm product delivery information
Example: Confirm prototype delivery, small batch delivery, batch delivery and other delivery information.

5. 生成杰牌产品2D/3D图
Generate 2D/3D drawing of JIE products

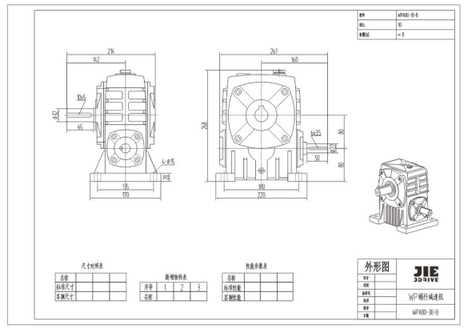

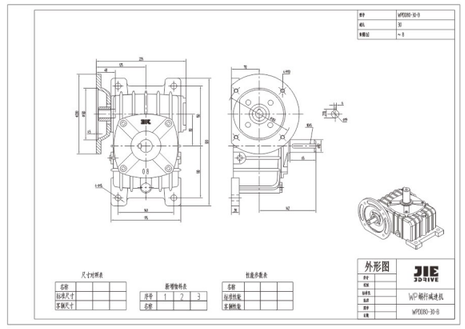

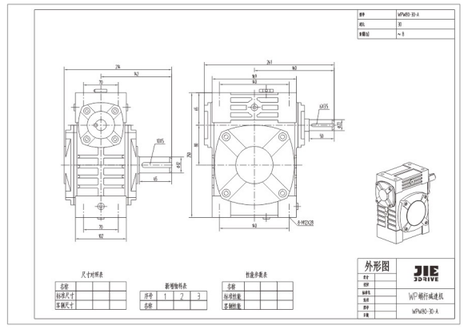

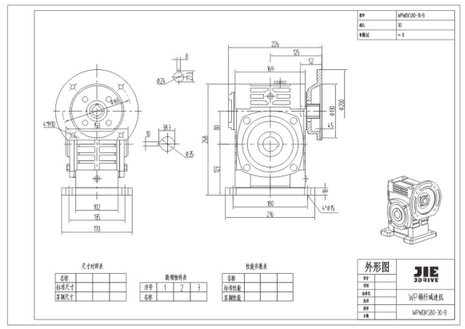

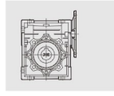
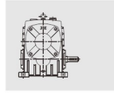
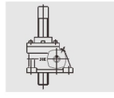

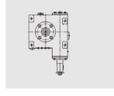
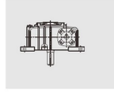


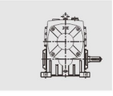
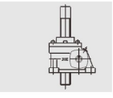

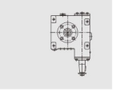
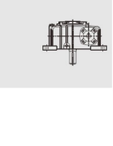

一. 选型步骤-JRSS
Selection Guide

1

选择杰牌传动产品

例：JRSS丝杆升降机、JRSSD丝杆升降机等信息。

Select JIE Drive product

Example: Pick the right model,JRSS Screw Jack,JRSSD Screw Jack ,etc.

2

输入现用产品品牌

例：杰牌传动、欧美日品牌、中国品牌等信息。

Enter current product brand

Example: JIE Drive or competitors.

3

输入现用产品参数

例：JRSS丝杆升降机：35~150，传动比：5~36，输入功率：0.19~16.3kW，起升力：500~26050kg等型号规格信息。

Enter current product specifications

Example: JRSS Screw Jack, size 35~150, ratio 5~36, input power 0.19~16.3kW, lifter force 500~26050kg and other models.

4

生成杰牌产品型号规格

例：JRSS70-20-AR-290-A, JRSS70-20-AT-290-A, JRSS70-20-AS-290, JRSS70-20-AH-290-A等型号规格信息。

Generate JIE Drive model and specifications

Example: JRSS70-20-AR-290-A, JRSS70-20-AT-290-A, JRSS70-20-AS-290, JRSS70-20-AH-290-A with specifications.

5

生成杰牌产品2D/3D图

例：JRSS70-20-AR-290-A, JRSS70-20-AT-290-A, JRSS70-20-AS-290, JRSS70-20-AH-290-A等产品2D/3D图信息。

Generate 2D/3D drawings of JIE Drive products

Example: 2D/3D drawings of JRSS70-20-AR-290-A, JRSS70-20-AT-290-A, JRSS70-20-AS-290, JRSS70-20-AH-290-A and other models.

6

确认技术质量标准

例：技术质量标准按杰牌相关标准和双方协议约定的标准执行，质保期自发货之日起18个月或实际使用之日起12个月，以先到为准等信息确认。

Confirm the technical quality standard

Example: The technical and quality standards shall be implemented according to the relevant standards of JIE Drive and the standards agreed by both parties. The warranty period shall be 12 months after start using products or 18 months after shipment from JIE whichever comes earlier.

7

确认交期服务标准

例：首次合作按双方协议约定时间交货；提供1+3滚动计划时7天交货，包括总用量、年用量、月用量、批用量、试用量；售前服务、售中服务、售后服务和预单管理等信息确认。

Confirm delivery standard

Example: Delivery shall be made according to the time agreed by both parties for the first cooperation;7 days lead time base on 1+3 rolling plan, including total usage, annual usage, monthly usage, batch usage and sample; confirmation of pre-sales service, in-sales service, after-sales service and pre-order management.

8

确认结算价格标准

例：30%定金款到后订单生效，余款款到后发货；价格按双方协议约定的价格执行等信息确认。

Confirm the settlement price standard

Example: The order comes into effective after 30% deposition received and products will be delivered after balance payment; price shall be subject to agreed upon both parties.

9

确认产品订单信息

例：产品名称、型号规格、技术参数、订单数量、产品颜色、包装形式、运输方式、下单时间、交付时间、交付地点、收货单位等信息确认。

Confirm order information

Example: Confirm product type, model, specification; order quantity, color, packaging, transportation, P.O issue time, delivery time, delivery location, receiving company and other order information.

10

确认产品交付信息

例：样机订单交付、小批订单交付、批量订单交付等信息确认。

Confirm product delivery information

Example: Confirm prototype delivery, small batch delivery, batch delivery and other delivery information.

5. 生成杰牌产品2D/3D图
Generate 2D/3D drawing of JIE products

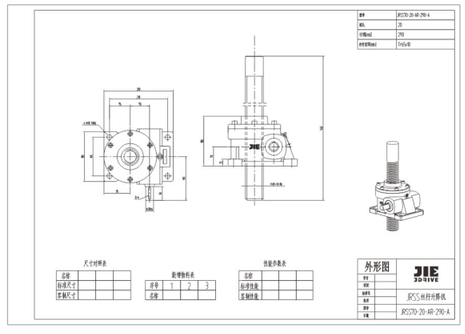

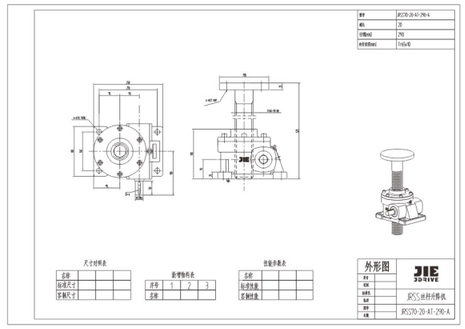

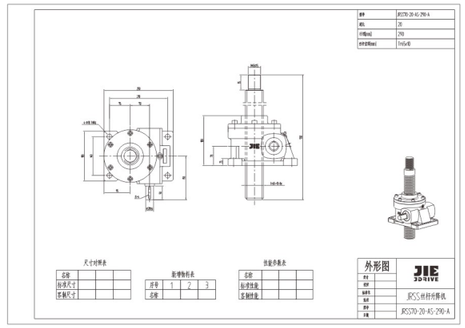

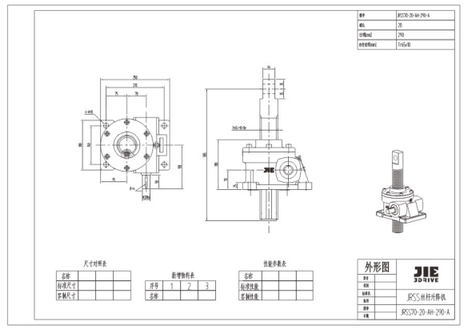


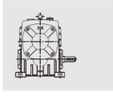
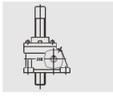

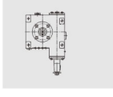
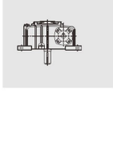

一. 选型步骤-JRTM
Selection Guide


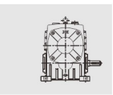
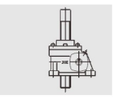

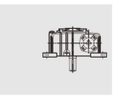

1

选择杰牌传动产品
例：JRTM锥齿轮转向器等信息。

Select JIE Drive product
Example: Pick the right model,JRTM Right Angle Bevel Gear Unit, etc.

2

输入现用产品品牌
例：杰牌传动、欧美日品牌、中国品牌等信息。

Enter current product brand
Example: JIE Drive or competitors.

3

输入现用产品参数
例：JRTM锥齿轮转向器：02~25，传动比：1~5，输入功率：0.014~335kW，输出扭矩：11.2~5713Nm等型号规格信息。

Enter current product specifications
Example: JRTM Right Angle Bevel Gear Unit, size 02~25, ratio 1~5, input power 0.014~335kW, output torque 11.2~5713Nm and other models.

4

生成杰牌产品型号规格
例：JRTM04-1-I-U-B3，JRTM04-1-I-D-B3，JRTM04-1-D-L-B3，JRTM04-I-U-LR-B3等型号规格信息。

Generate JIE Drive model and specifications
Example: JRTM04-1-I-U-B3，JRTM04-1-I-D-B3，JRTM04-1-D-L-B3，JRTM04-I-U-LR-B3 with specifications.

5

生成杰牌产品2D/3D图
例：JRTM04-1-I-U-B3，JRTM04-1-I-D-B3，JRTM04-1-D-L-B3，JRTM04-I-U-LR-B3等产品2D/3D图信息。

Generate 2D/3D drawings of JIE Drive products
Example: 2D/3D drawings of JRTM04-1-I-U-B3，JRTM04-1-I-D-B3，JRTM04-1-D-L-B3，JRTM04-I-U-LR-B3 and other models.

6

确认技术质量标准
例：技术质量标准按杰牌相关标准和双方协议约定的标准执行，质保期自发货之日起18个月或实际使用之日起12个月，以先到为准等信息确认。

Confirm the technical quality standard
Example: The technical and quality standards shall be implemented according to the relevant standards of JIE Drive and the standards agreed by both parties. The warranty period shall be 12 months after start using products or 18 months after shipment from JIE whichever comes earlier.

7

确认交期服务标准
例：首次合作按双方协议约定时间交货；提供1+3滚动计划时7天交货，包括总用量、年用量、月用量、批用量、试用量；售前服务、售中服务、售后服务和预单管理等信息确认。

Confirm delivery standard
Example: Delivery shall be made according to the time agreed by both parties for the first cooperation;7 days lead time base on 1+3 rolling plan, including total usage, annual usage, monthly usage, batch usage and sample; confirmation of pre-sales service, in-sales service, after-sales service and pre-order management.

8

确认结算价格标准
例：30%定金款到后订单生效，余款款到后发货；价格按双方协议约定的价格执行等信息确认。

Confirm the settlement price standard
Example: The order comes into effective after 30% deposition received and products will be delivered after balance payment; price shall be subject to agreed upon both parties.

9

确认产品订单信息
例：产品名称、型号规格、技术参数、订单数量、产品颜色、包装形式、运输方式、下单时间、交付时间、交付地点、收货单位等信息确认。

Confirm order information
Example: Confirm product type, model, specification; order quantity, color, packaging, transportation, P.O issue time, delivery time, delivery location, receiving company and other order information.

10

确认产品交付信息
例：样机订单交付、小批订单交付、批量订单交付等信息确认。

Confirm product delivery information
Example: Confirm prototype delivery, small batch delivery, batch delivery and other delivery information.

5. 生成杰牌产品2D/3D图
Generate 2D/3D drawing of JIE products

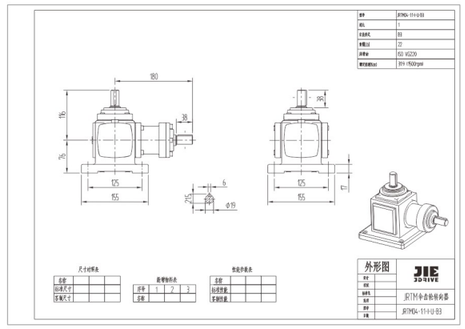

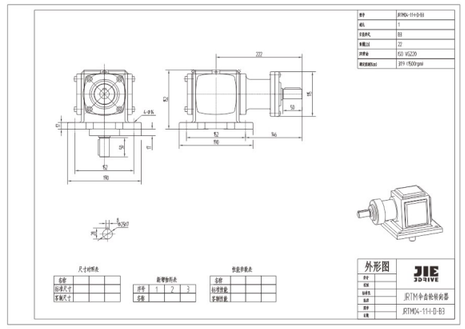

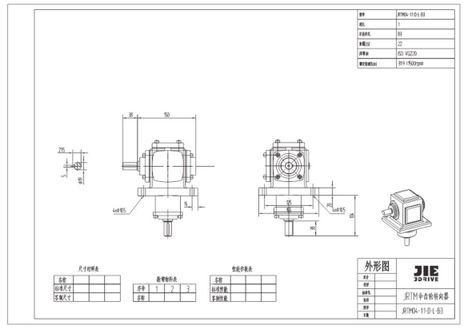

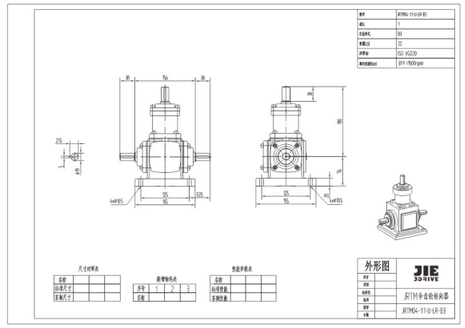


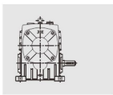
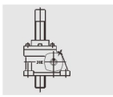

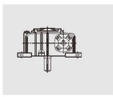

二. 产品图片-JRST
Product Pictures

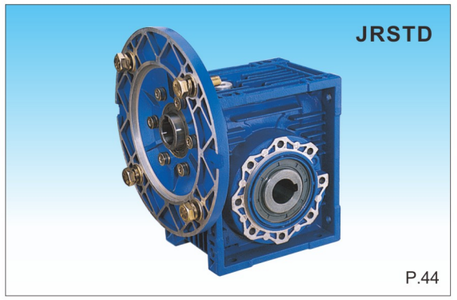

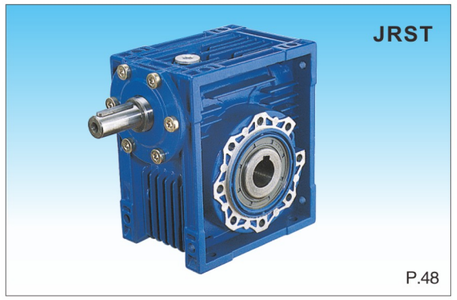

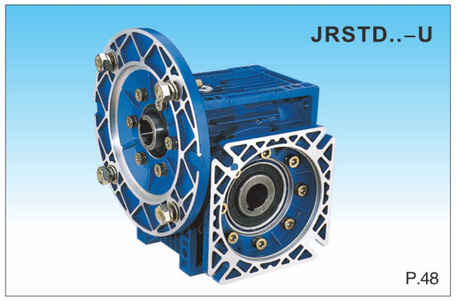

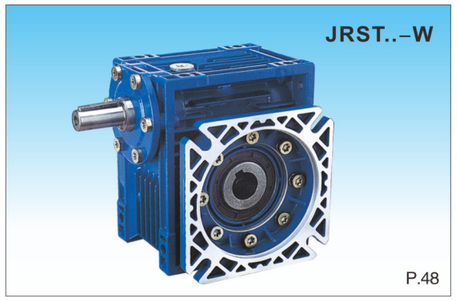

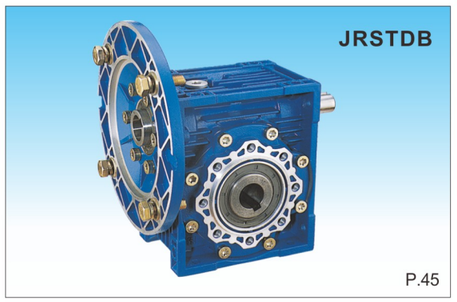

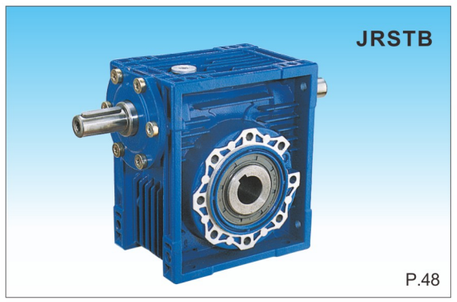

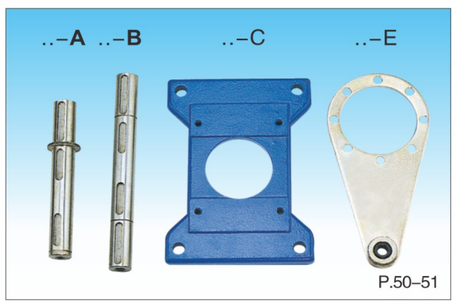

二. 产品图片-WP
Product Pictures

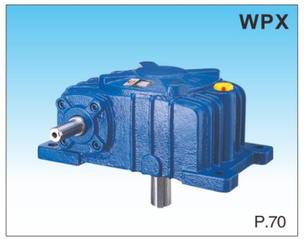

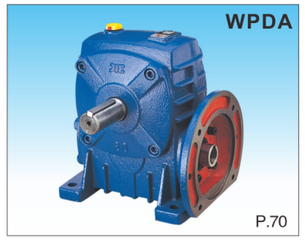

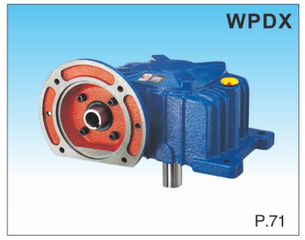

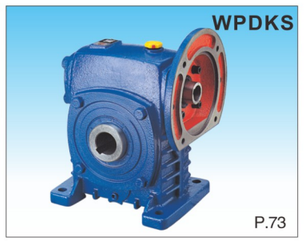

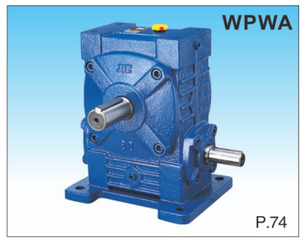

二. 产品图片-WP
Product Pictures

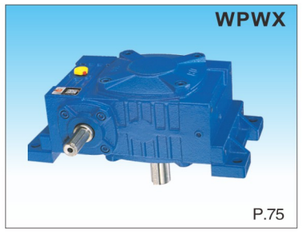

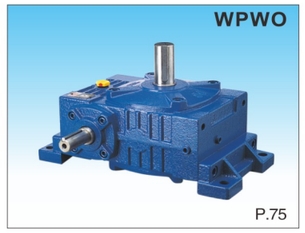

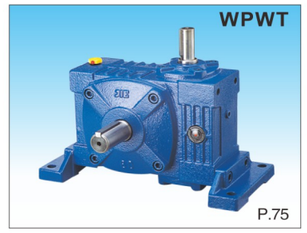

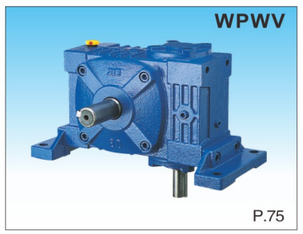

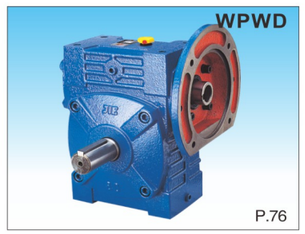

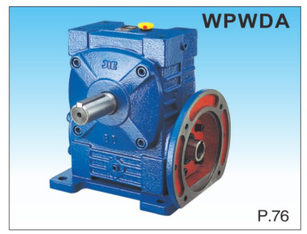

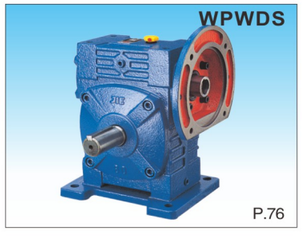

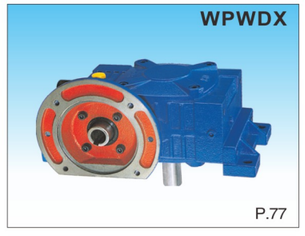

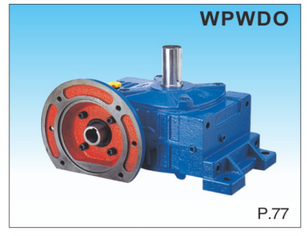

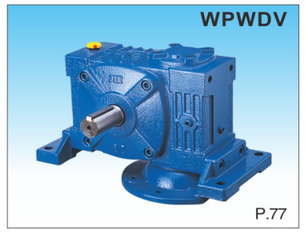

二. 产品图片-WP
Product Pictures

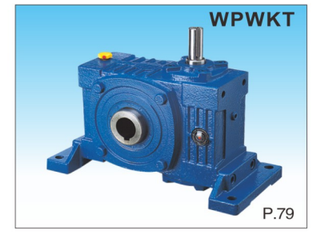

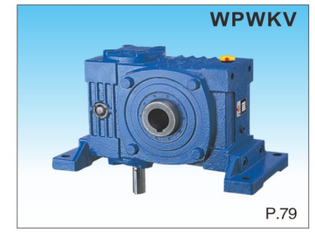

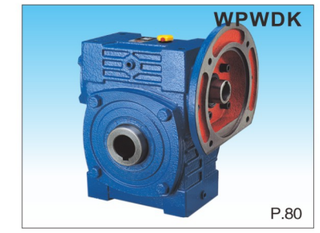

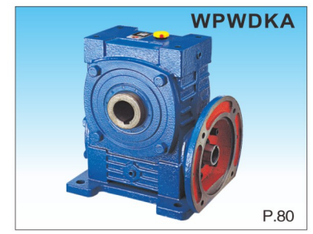

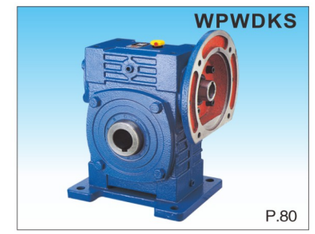

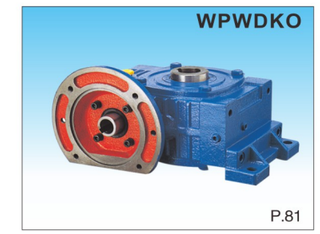

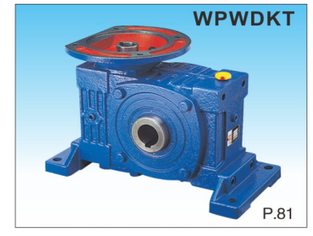

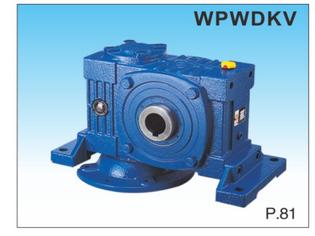

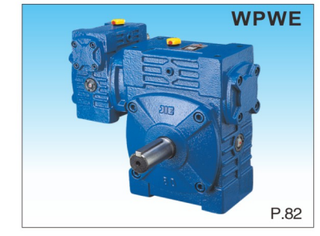

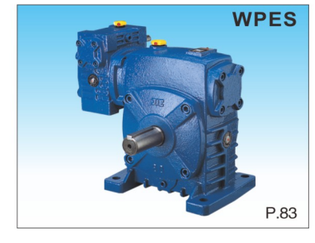

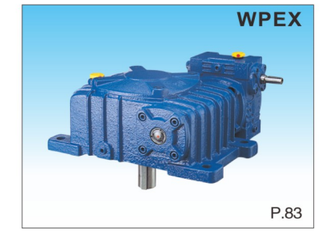

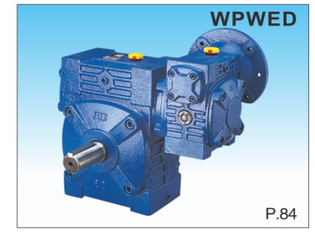

二. 产品图片-WP
Product Pictures

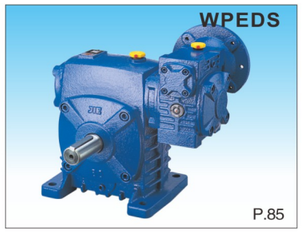

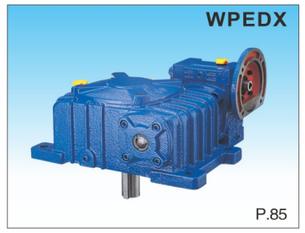

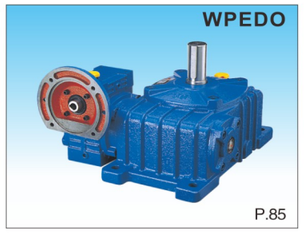

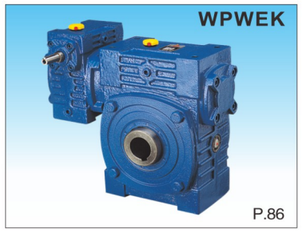

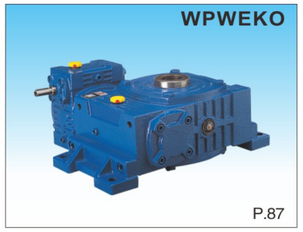

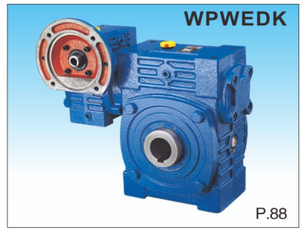

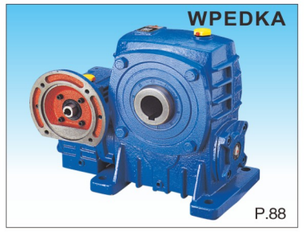

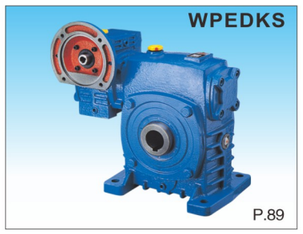

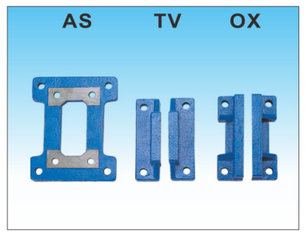

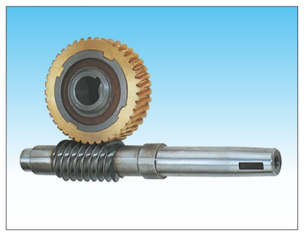

二. 产品图片-JRSS
Product Pictures

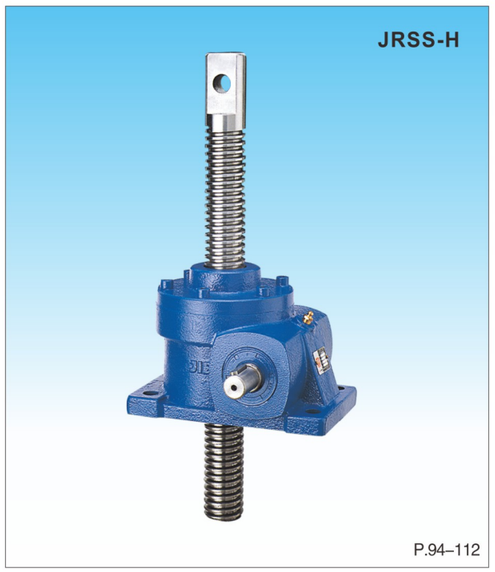

二. 产品图片-JRTM
Product Pictures

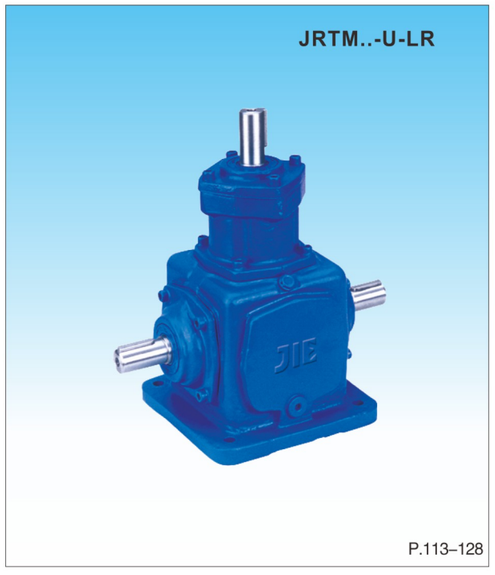

三. 产品说明
Product Description

杰牌JRW高效蜗杆减速机，拥有自主知识产权，产品具有低噪音、低侧隙、高精度、高效率、不漏油和快交付等亮点，包括JRW蜗杆减速机、JRW+精密蜗杆减速机等全系列产品。

杰牌JRW高效蜗杆减速机，通过完整产品策划与设计和全价值链精益生产最优方案实施，推进精益生产、建设智能工厂，实现研产供销服一体化，以满足客户对快速响应的需求。

杰牌JRW高效蜗杆减速机，遵循模块化和最优化设计理念，全系列产品包括蜗杆减速机、实心轴输入接口、IEC电机输入接口、伺服电机输入接口、NEMA电机输入接口，实心轴输出模块、空心轴输出模块、法兰输出模块，底脚安装、法兰安装、扭矩臂安装等输入接口、输出模块和安装型式，同时支持多级减速机和不同型号规格减速机的模块化组合与集成，产品颜色为RAL7031，产品按单包装，包括可循环包装和绿色包装，可根据客户需要进行个性化的设计与制造。

杰牌为全球好客户做好产品，杰牌智能传动方案提供商！

JRW high-efficiency worm reducers with independent intellectual property rights, is featured with low noise, low backlash, high precision and high efficiency, no oil leakage and short lead time. The products range include JRW standard worm gearbox with JRW high precision worm gearbox.

JRW high-efficiency worm reducers promotes lean production, builds intelligent factories, and realizes the integration of research, production, supply, marketing and service, so as to meet customers' demand for rapid response through complete product planning and design such as “core product-extreme technology, peripheral product-extreme service, external product-extreme experience” and the implementation of the optimal plan of lean production in the whole value chain such as “product planning, design validation, processing test, assembly test, warehouse logistics, sales service, information system, HR, operation plan, strategy planning”.

JRW high-efficiency worm reducers follows the concept of modular and optimized design. The whole-series product include worm gearbox, solid shaft input interface, IEC electric motor input interface, servo motor input interface, NEMA motor input interface, solid shaft output module, hollow shaft output module, flange output module, foot mounting, flange mounting, torque arm mounting and etc. This product supports the modular combination and integration of multi-stage gearbox with different types adapters, with standard painting color RAL7031 & packed based on order by recyclable materials. And available for customized base on customer requirement.

JIE is committed to providing great products for great partners across the world, JIE Intelligent Drive Solutions Provider.

四. JRST 蜗杆减速机
JRST Worm Gearbox

分 目 录

SUB-CONTENTS

1. 产品结构
Products Structure

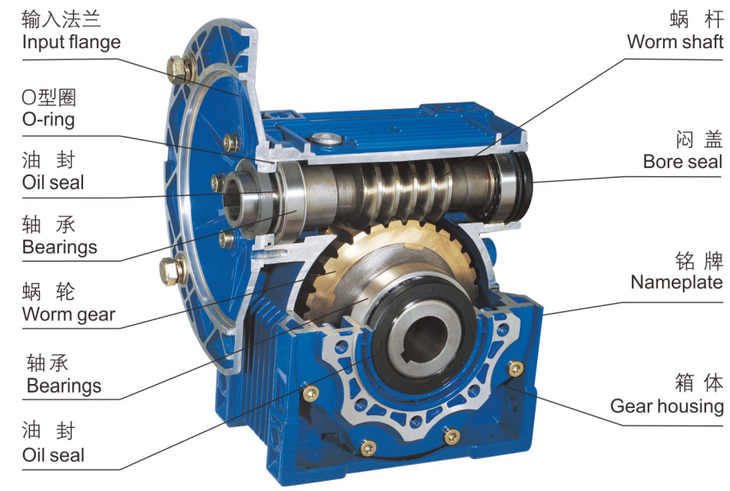

2. 型号说明
Model Description

2. 1 型号结构表
Model and Structure Table

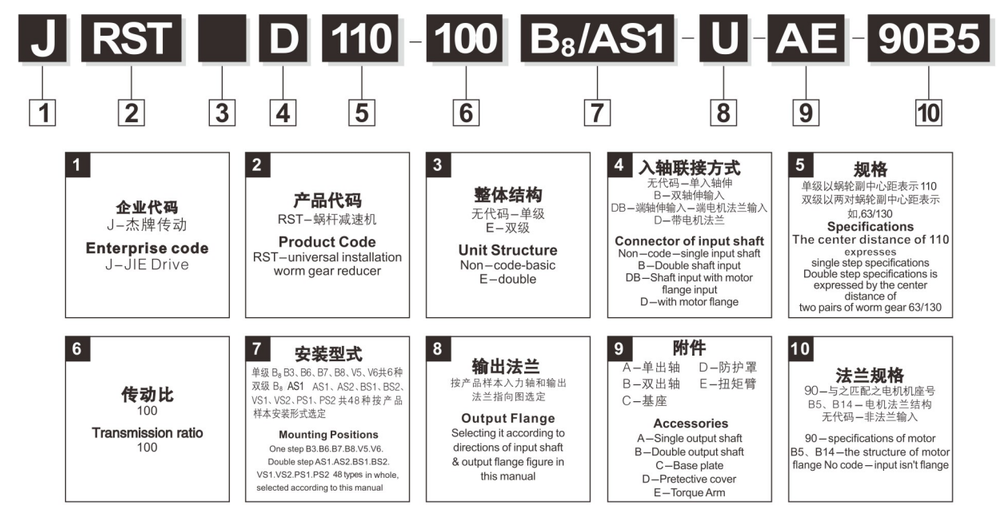

注：1、用户需要带电机时，请注明“带电机”字样，并注明所带电机的基本参数。
2、附件为按用户需求随减速机附带之零件，未直接装配在减速机上，用户可根据实际需要自行装配。
Note: 1.If you need motor, please note “with motor” and the model, power & poles of the motor.
2.Accessories are unassembled. You may assemble them according to your need.

2.2. 国内外型号对照
Comparative table of model

杰牌传动 JIE	JRSTD25	JRSTD30	JRSTD40	JRSTD50	JRSTD63	JRSTD75	JRSTD90	JRSTD110	JRSTD130	JRSTD150
		JRST30	JRST40	JRST50	JRST63	JRST75	JRST90	JRST110	JRST130	JRST150
国外企业 Foreign	NMRV025	NMRV030	NMRV040	NMRV050	NMRV063	NMRV075	NMRV090	NMRV110	NMRV130	NMRV150
		NRV030	NRV040	NRV050	NRV063	NRV075	NRV090	NRV110	NRV130	NRV150
国内企业 Domestic	NMRV025	NMRV030	NMRV040	NMRV050	NMRV063	NMRV075	NMRV090	NMRV110	NMRV130	NMRV150
		NRV030	NRV040	NRV050	NRV063	NRV075	NRV090	NRV110	NRV130	NRV150
	WJ25	W J30	W J40	W J50	W J63	W J75	W J90	W J110	W J130	W J150
	WWJK25	WWJK30	WWJK40	WWJK50	WWJK63	WWJK75	WWJK90	WWJK110	WWJK130	WWJK150
		WWJZ30	WWJZ40	WWJZ50	WWJZ63	WWJZ75	WWJZ90	WWJZ110	WWJZ130	WWJZ150

2.3. 入力轴和输出法兰指向图
Directions of input shaft & output flange

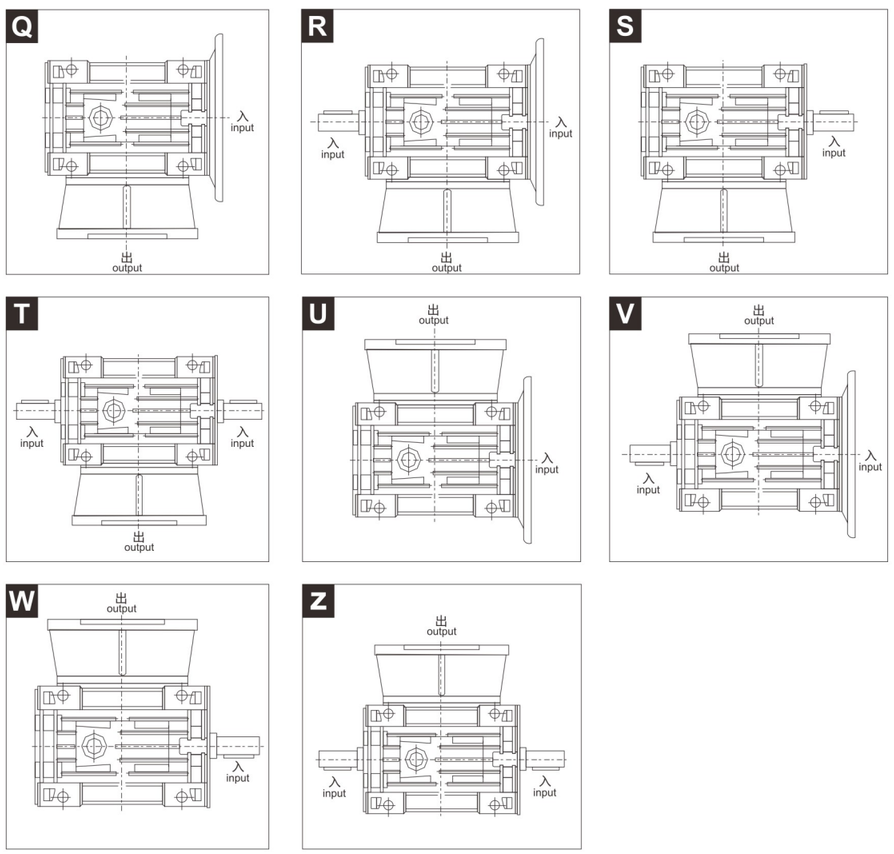

2.4. 单级安装型式
Single Step Mounting Positions

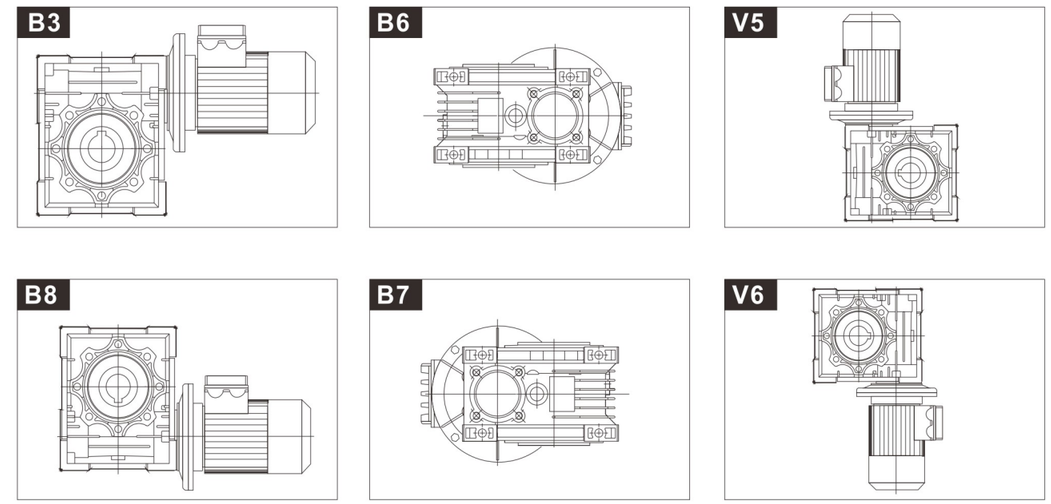

2.5. 双级安装型式
Double Step Mounting Positions

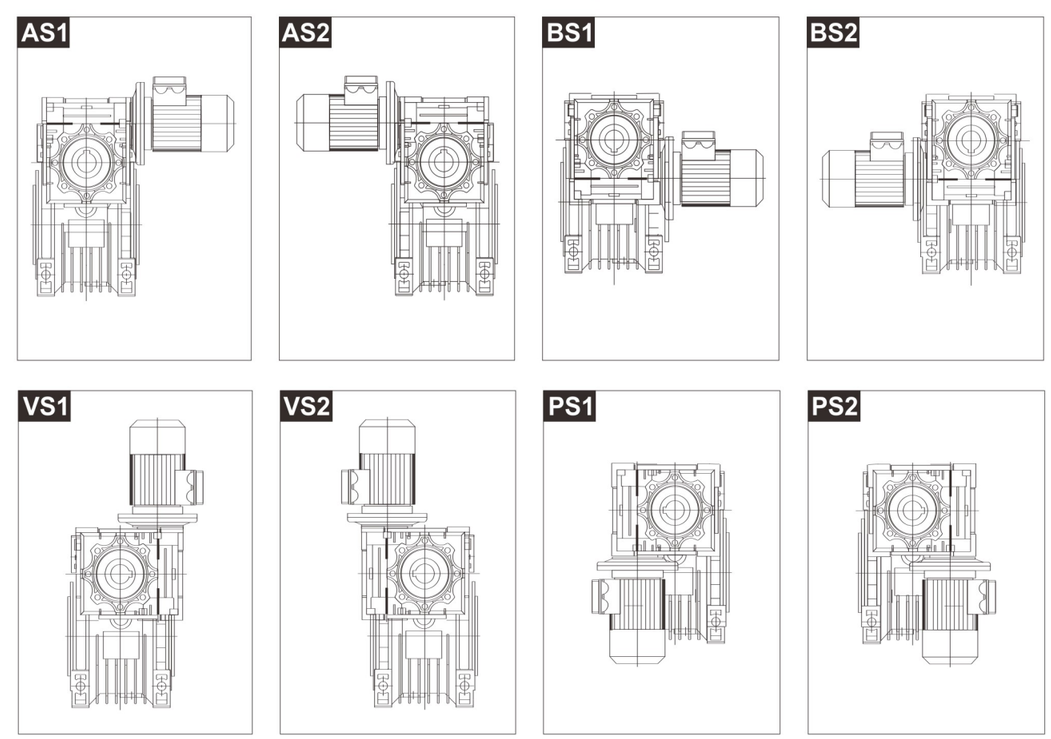

3. 产品说明
Product Description

杰牌JRST蜗杆减速机，拥有自主知识产权，产品具有低噪音、低温升、不漏油、快交付、易安装和免维护等亮点，包括JRST蜗杆减速机、JRSTD蜗杆减速机等全系列产品。

杰牌JRST蜗杆减速机，通过完整产品策划与设计和全价值链精益生产最优方案实施，推进精益生产、建设智能工厂，实现研产供销服一体化，以满足客户对快速响应的需求。

杰牌JRST蜗杆减速机，遵循模块化和最优化设计理念，产品包括蜗杆减速机，实心轴输入接口、IEC电机输入接口、伺服电机输入接口、NEMA电机输入接口，实心轴输出模块、空心轴输出模块、法兰输出模块，底脚安装、法兰安装、扭矩臂安装等输入接口、输出模块和安装型式，同时支持多级减速机和不同型号规格减速机的模块化组合与集成，产品颜色为RAL7031，并按单包装，可根据客户需要进行个性化的设计与制造。

杰牌为全球好客户做好产品，杰牌智能传动方案提供商！

JRST worm gearbox with independent intellectual property rights, is featured with low noise, low temperature rise, no oil leakage, short lead time, convenient installation and maintenance free. It includes JRST worm gearbox and JRSTD worm gearbox.

JRST worm gearbox promotes lean production, builds intelligent factories, and realizes the integration of research, production, supply, marketing and service, so as to meet customers' demand for rapid response through complete product planning and design such as “core product-extreme technology, peripheral product-extreme service, external product-extreme experience” and the implementation of the optimal plan of lean production in the whole value chain such as “product planning, design validation, processing test, assembly test, warehouse logistics, sales service, information system, HR, operation plan, strategy planning.”

JRST worm gearbox follows the concept of modular and optimized design. It includes worm gearbox, solid shaft input interface, IEC electric motor input interface, servo motor input interface, NEMA motor input interface, solid shaft output module, hollow shaft output module, flange output module, foot mounting, flange mounting, torque arm mounting and etc.. This product supports the modular combination and integration of multi-stage gearbox with different types adapters, with standard painting color RAL7031 & packed based on order. And available for customized base on customer requirement.

JIE is committed to providing great products for great partners across the world, JIE Intelligent Drive Solutions Provider.

4. 选型说明
Selection Description

4.1 杰牌传动JRST产品选型表

使用工况：

应用行业：　　设备名称：
环境温度：　　环境湿度：
海拔高度：　　使用场地：□室内 □室外
起停频率：　　运行时间：
负载时间：□15% □25% □40% □60% □100%
现用品牌：　　现用型号：
存在问题：　　需改进项：

产品信息：

包装附件类：
包装材质：□纸箱 □木箱 □纸箱+木箱　　箱贴唛头：□中文 □英文
相关资料：□合格证 □出厂检验报告 □中文说明书 □英文说明书
附件清单：□扭矩臂 □防护罩 □单出轴 □双出轴 □基座
外观标识类：
油漆颜色：□JMR-01 □JMG-01 □JGB-01 □RAL2002 □RAL5015 □RAL9003 □RAL7045 □RAL7031
防腐等级：□标准 □JS1 □JS2 □JS3 □JS4
铭牌要求：□中文 □英文
安装尺寸类：
产品类型：□JRST □JRSTD □JRSTB □JRSTDB □JRSTE
安装方式：□B3 □B6 □B7 □B8 □V5 □V6 □AS1 □AS2 □BS1 □BS2 □VS1 □VS2 □PS1 □PS2 （见附图）
法兰方向：□Q □R □S □T □U □V □W □Z □无 （见附图）
出轴旋向：□顺时针 □逆时针 □双向
性能指标类：
传动比：i=_____　输出扭矩（Nm）：_____　使用系数：_____
_____
电机类型：□标准电机 □变频电机 □防爆电机 □辊道电机 □起重电机 □伺服电机
电机极数：□2 □4 □6 □8　　电机功率：_____kW
额定电压：□220/380V □380/660V　　电机基频：□50Hz □60Hz □87Hz
绝缘等级：□F □H　　防护等级：□IP54 □IP55
工作制： □S1 □S3-40%　　冷却方式：□IC410 □IC411 □IC416
能效能级：□3级（IE3） □2级（IE4）　　旋转方向：□顺时针 □逆时针
制动电压：□DC 24V □AC 220V □AC 380V
制动器响应：□普通 □快速　　释放装置：□手柄释放HR □螺钉释放HF □无
风机电压：□DC 24V □AC 220V（1～）□AC 380V（1～） □AC 220/380V（3～）
风机频率：□50Hz □60Hz
释放装置与接线盒角度（从轴伸端看顺时针）：□0°□90°□180°□270°（见附图）
产品型号：

定制信息：
包装类：
外观类：
安装尺寸类：
性能指标类：
售后服务类：

服务信息：
售前服务：
培训咨询：☐选型培训 ☐应用培训 ☐使用维护
设计选型：☐参与设计 ☐设计校核 ☐产品选型
需求确认：☐工况确认 ☐产品确认 ☐服务确认
售中服务：☐驻厂全检 ☐过程抽检 ☐出厂检验
售后服务：☐安装调试 ☐检测维护 ☐备品备件

商务信息：
运输方式：
交付地点：
交付时间：
订单数量：
结算价格：

附图：
安装方式：

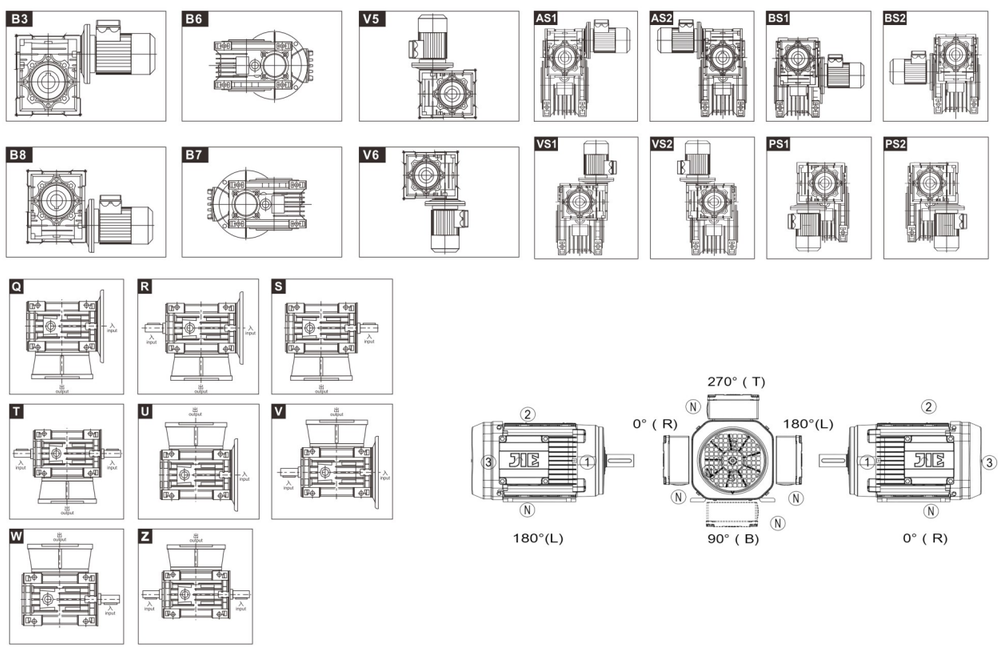

Selection Table of JIE JRST Products

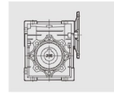

Conditions of use:
Application industry: Equipment name:
Ambient temperature: Ambient humidity:
Altitude: Site of use：☐indoor ☐outdoor
Start-stop frequency: Running time:
Load time：☐15% ☐25% ☐40% ☐60% ☐100%
Current brand: Current model:
Existing problem: Items needing improvement:

Product information:
Packing accessories:
Packaging material：☐Carton ☐Wooden case ☐Carton + Wooden case Case mark：☐Chinese ☐English
Relevant data：☐Certificate of conformity ☐Ex-factory inspection report ☐Chinese operating instruction
☐English operating instruction
List of accessories：☐Torque arm ☐Protective cover ☐Single output shaft ☐Double output shaft ☐Base
Appearance identification:
Paint color：JMR-01 ☐JMG-01 ☐JGB-01 ☐RAL2002 ☐RAL5015 ☐RAL9003 ☐RAL7045 ☐RAL7031
Nameplate requirement：☐Chinese ☐English Anti-corrosive grade：☐Standard ☐JS1 ☐JS2 ☐JS3 ☐JS4
Installation dimension:
Product model：☐JRST ☐JRSTD ☐JRSTB ☐JRSTDB ☐JRSTE
Mount position：☐B3 ☐B6 ☐B7 ☐B8 ☐V5 ☐V6 ☐AS1 ☐AS2 ☐BS1 ☐BS2 ☐VS1 ☐VS2 ☐PS1 ☐PS2
(see attached figure)
Flange direction：☐Q ☐R ☐S ☐T ☐U ☐V ☐W ☐Z ☐None (see attached figure)
Output shaft rotation：☐Clockwise ☐Counterclockwise ☐Two-direction
Performance indicators:
Transmission ratio：i=_____ Output torque（Nm）：_____ Service factor：_____
Type of motor：☐Standard motor ☐Frequency conversion motor ☐Explosion-proof motor ☐Roller motor
☐Lifting motor ☐Servo motor
Rated power：_____kW Pole number：☐2 ☐4 ☐6 ☐8
Rated voltage：☐220/380V ☐380/660V Motor frequency：☐50Hz ☐60Hz ☐87Hz
Insulation grade：☐F ☐H Protection grade：☐IP55 ☐IP56
Working system：☐S1 ☐S3-40% Cooling mode：☐IC410 ☐IC411 ☐IC416
Energy efficiency class: ☐ IE3 ☐ IE4 Direction of rotation：☐Clockwise ☐Counterclockwise
Braking voltage：☐DC 24V ☐AC 220V ☐AC 380V
Brake response: ☐ Ordinary ☐ Fast Release device: ☐Handle release HR ☐Screw release HF ☐None
Fan voltage：☐DC 24V ☐AC 220V（1～） ☐AC 220V（1～） ☐AC 380V（3～）
Fan frequency：☐50Hz ☐60Hz
Angle between release device and terminal box (clockwise from the end of shaft extension) :
☐0° ☐90° ☐180° ☐270° (see attached figure)
Product model:

Customized information:

Packaging:

Appearance:

Installation dimension:

Performance indicators:

After-sales service:

Service information:

Pre-sales service:

Training consulting: ☐ Type selection training ☐ Application training ☐ Use and maintenance

Design selection: ☐ Participate in design ☐ Design verification ☐ Product selection

Demand confirmation: ☐ Working condition confirmation ☐ Product confirmation ☐ Service confirmation

In-sales service: ☐ On-site full inspection ☐ Process sampling ☐ Ex-factory inspection

After-sales service: ☐ Installation and commissioning☐ Testing and maintenance ☐ Spare parts

Business information:

Transportation:

Delivery place:

Delivery time:

Order quantity:

Settlement price:

Attached figure:

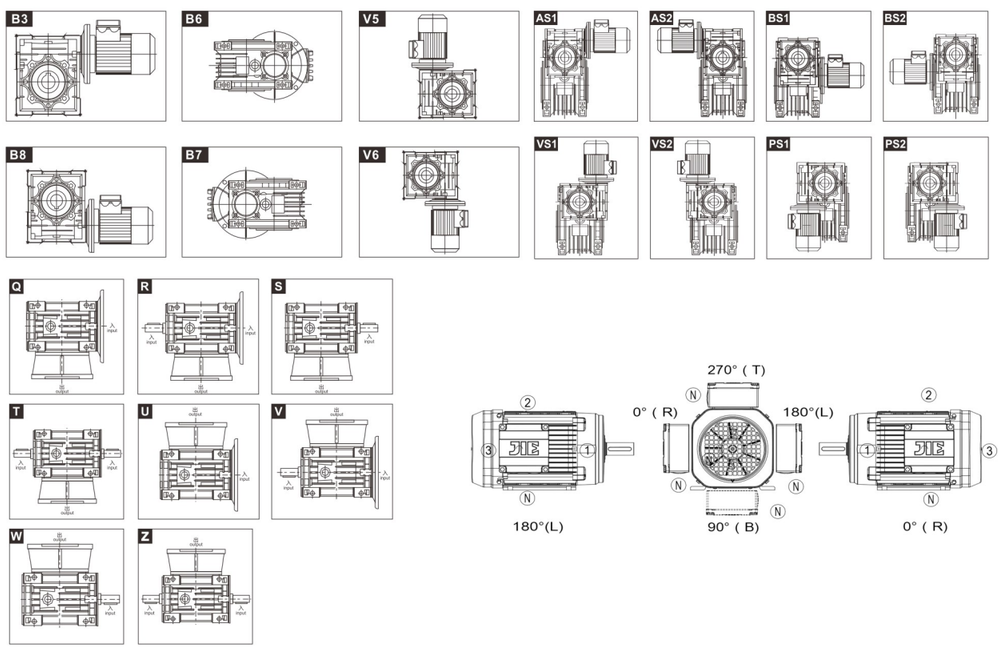

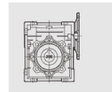

4.2 为正确选择JRST蜗杆减速机，敬请用户首先了解以下几点：

Please understand the following at first in order to select the model of JRST Worm gear speed reducer properly:

- 负荷条件。
  Load condition.
- 使用转速范围或传动比（与双级组合可获得超低输出转速）。
  Speed scope or Transmission ratio in application.
- 工作运转情况及环境（温度、湿度、腐蚀等）。
  Working condition and environment.
- 安装空间。
  Installation space.

4.3 确定工作情况系数K1及工作情况修正系数K2。

Define working condition Coefficient K1 and revise coefficient K2.

- 根据表1，决定机械负荷种类A、B、C。
  Ensure machinery load types A, B, C according to table 1.
- 根据运转时间（小时/天）和启动频率（次数/小时）从图1中求得工作情况系数K1。
  Get the working condition coefficient K1 from diagram 1 according to turning time (hour/day) and start frequency (times/hour).
- 根据表2，查取工作情况修正系数K2。
  Inspect working condition and select coefficient K2 from table 2.

机械负荷种类选定（表1）
Table 1 Machinery Load classification selection

使用情况 Using situation	示例 Example	负荷种类 Load type
无冲击均匀负荷 Uniform load	传送带（均速输送） Convey band(uniform conveying)	A（均匀负荷） A(Uniform load)
中等冲击负荷 Moderate Load	传送带（变速输送） Speed changed conveying	B（中等冲击负荷） B(Moderate load)
强烈冲击负荷 Severe Load	压缩机、粉碎机等 Compressor、pulverizer, etc.	C（强冲击负荷） C(Severe load)

工作情况修正系数K2选定（表2）
Table 2 Working condition coefficient K2

环境温度 Ambient temperature	工作情况修正系数K2 Working condition coefficient K2
-10℃~ 30℃	1
30℃ ~ 40℃	1.1 ~ 1.2

工作情况系数K1选定（图1）
Diagram 1 working Condition coefficient K1

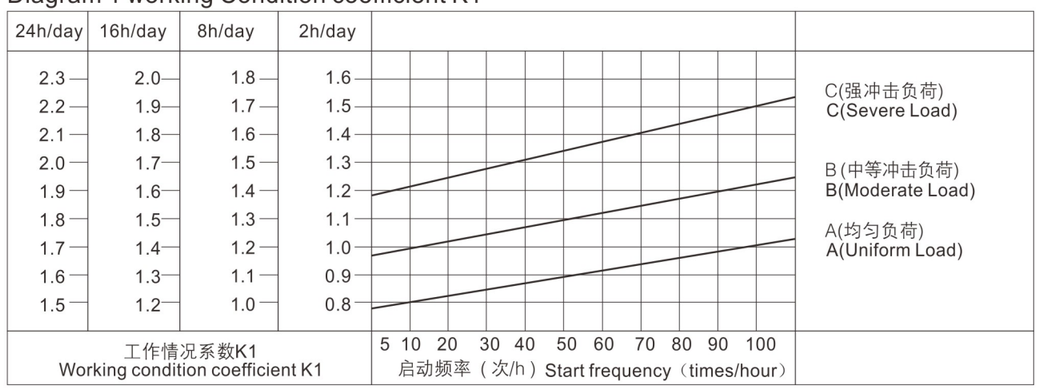

4.4 选定减速机
Reducer selected

- 用户须先确定工作机输入机械负荷T(扭矩)，以T乘以工作情况系数K1，再乘以工作情况修正系数K2，即获得减速机应有的输出扭矩值，以此为据，并结合速比值或输出转速值，选定所需减速机。

★ 当使用于升降工况时请咨询JIE后再选型
At first it is better to make sure the value of input machinery load T(torque) and then you can get the output torque through T multiply with work situation coefficient K1 and work situation revise coefficent K2 .The required model can be gained by the above and connecting ratio or output speed.
Please consult JIE before selecting the model when it is used in lifting scenarios.

- 用户也可以根据已知的输入功率，结合传动比值或输出转速 值，计算输出扭矩，选定减速机。
You can also select the reducer as followings:calculate output torque according to known input power and then select the reducer in accordance with output torque and rotate speed.
- 本公司减速机均为右旋螺牙，根据右手定则，确定输入轴、输出轴回转方向。
Our standard reducers all have right-hand helical tooth,deciding the rotating direction of input shaft and output shaft according to the rigtht-hand criterion.

4.5 选型示例
Examples for model chosen

例1 通用传送带（均匀负荷）
EX1 Common convey band(uniform load)

扭矩：19Nm， 运转时间：8小时/天，
转速：约55r/min， 启动频率：10次/小时，
传动比：1/25， 环境温度：室内25℃， 电机直联
Torque:19Nm Turning time:8hours/day
Speed:About 55r/min Start frequency:10times/hour
Transmission ratio:1/25 Environment temperature:indoor 25℃ Connect with motor directly

- 根据表1，决定负荷种类：无冲击均匀负荷，选A；
Load classification:Uniform load,choose A.Select load classification according to table1;
- 根据图1，在A线上取频率10次/小时的交点；查出运转时间8小时/天的系数K1=1；
As per cross point of 10 times/hour frequency on line A in diagram 1,get coefficient K1 value is 1 that turning time is 8 hours/day;
- 根据表2，查得系数K2=1；
Get the coefficient K2 according to table 2;
- 则扭矩值为19xK1xK2=19x1x1=19Nm，可选择最接近19Nm的减速机。
So the torque value is 19Nm.

选定结果：JRSTD30—1/25
Choose model:JRSTD30-1/25
输入功率0.18kW，输出转速56转/分，输出扭矩21Nm；
Input power is 0.18kW, output speed is 56r/min,output torque is 21Nm;
校核：实际输出扭矩=输出扭矩x使用系数(fs)=21x1.0=21Nm>19Nm，满足使用要求。
You can get the actual output torque through the nominal output torque 21Nm multiply with the coefficient fs 1,so the actual output torque is 21 Nm＞19Nm.The selected model is suitable for use.

例2 输送带(中等冲击负荷)
EX2 Covey band(moderate load)

扭矩：65Nm， 运转时间：16小时/天，
转速：约21r/min， 启动频率：100次/小时，
传动比：1/60， 环境温度：室内35℃ 电机直联
Torque:65Nm Turning time:16 hours/day
Speed:About 21r/min Start frequency:100 times/hour
Transmission ratio:1/60 Environment temperature:indoor 35℃ Connect with motor directly

- 根据表1，决定负荷种类：中等冲击负荷，选B；
As per load classification table 1 :moderate load,choose B;
- 根据图1，在B线上取频率100次/小时的交点；查出运转时间16小时/天的系数K1=1.65；
As per cross point of 100 times/hours frequency on line B in diagram 1,get coefficient K1 valer is 1.65 that turning time is 16 hours/day;
- 根据表2，查得系数K2=1.15；
Get the coefficient K2 1.15 according to table 2;
- 则扭矩值为65xK1xK2=65x1.65x1.15=123Nm，可选择最接近123Nm的减速机。
So the torque value is 65Nm. You can select the model that torque value is the closest to 123 Nm.

选定结果：JRSTD63—1/60
Choose model:JRSTD63-1/60
输入功率0.55kW，输出转速23.3转/分，输出扭矩140Nm；
Input power is 0.55 kW, output speed is 23.3r/min,output torque is 140Nm;
校核：实际输出扭矩=输出扭矩x使用系数(fs)=140x0.9=126Nm>123Nm，满足使用要求。
You can get the actual output torque through the nominal output torque 140Nm mutiply with the coefficient fs 0.9,so the actual output is 126Nm＞123Nm.The selected model is suitable for use.

5. 技术参数
Technical Specifications

5.1 单级减速机(法兰输入，输入转速1400r/min)/(配4极电机)
Single step gearbox (flange input,input speed is 1400r/min)/(matched with 4 poles motor)

输出转速 Output speed r/min	输出扭矩 Output torque Nm	传动比 Transmission ratio i	输出轴径向力 Output radial force kN	使用系数 fs	机型代号 Model code
0.06kW					
186.7	2.6	7.5	0.5	4.2	JRSTD25
140	3.4	10	0.55	3.5	
93.3	4.9	15	0.63	2.5	
70	6.1	20	0.69	2.0	
46.7	8.2	30	0.79	1.6	
35	10	40	0.87	1.3	
28	12	50	0.94	0.9	
23.3	14	60	1	0.7	
186.7	2.6	7.5	0.68	6.9	JRSTD30
140	3.4	10	0.75	5.4	
93.3	4.7	15	0.86	3.8	
70	6	20	0.94	3.0	
56	7	25	1.02	3.0	
46.7	8	30	1.08	2.5	
35	9.7	40	1.19	1.9	
28	11	50	1.28	1.5	
23.3	13	60	1.36	1.3	
17.5	14	80	1.5	0.9	
0.09kW					
186.7	3.9	7.5	0.5	2.8	JRSTD25
140	5.1	10	0.55	2.4	
93.3	7.3	15	0.63	1.6	
70	9.2	20	0.69	1.3	
46.7	12	30	0.79	1.1	
35	15	40	0.87	0.9	
186.7	3.9	7.5	0.68	4.6	JRSTD30
140	5	10	0.75	3.6	
93.3	7.1	15	0.86	2.5	
70	9	20	0.94	2.0	
56	10	25	1.02	2.0	
46.7	12	30	1.08	1.7	
35	14	40	1.19	1.2	
28	17	50	1.28	1.0	
23.3	19	60	1.36	0.9	
28	19	50	2.47	2.0	JRSTD40
23.3	21	60	2.63	1.7	
17.5	26	80	2.89	1.3	
14	29	100	3.11	1.0	
0.12kW					
186.7	5.2	7.5	0.68	3.4	JRSTD30

输出转速 Output speed r/min	输出扭矩 Output torque Nm	传动比 Transmission ratio i	输出轴径向力 Output radial force kN	使用系数 fs	机型代号 Model code
0.12kW					
140	6.7	10	0.75	2.7	JRSTD30
93.3	9.5	15	0.86	1.9	
70	12	20	0.94	1.5	
56	14	25	1.02	1.5	
46.7	16	30	1.08	1.3	
35	19	40	1.19	0.9	
28	23	50	1.28	0.8	
46.7	17.2	30	2.08	2.6	JRSTD40
35	21	40	2.29	1.9	
28	25	50	2.47	1.5	
23.3	28	60	2.63	1.3	
17.5	34	80	2.89	1.0	
14	38	100	3.11	0.8	
23.3	29	60	3.61	2.3	JRSTD50
17.5	35	80	3.97	1.9	
14	40	100	4.28	1.4	
0.18kW					
186.7	7.8	7.5	0.68	2.3	JRSTD30
140	10	10	0.75	1.8	
93.3	14	15	0.86	1.3	
70	18	20	0.94	1.0	
56	21	25	1.02	1.0	
46.7	24	30	1.08	0.8	
70	19	20	1.82	2.0	JRSTD40
56	23	25	1.96	1.7	
46.7	26	30	2.08	1.7	
35	32	40	2.29	1.3	
28	38	50	2.47	1.0	
23.3	43	60	2.63	0.8	
35	32	40	3.15	2.3	JRSTD50
28	39	50	3.39	1.9	
23.3	43	60	3.61	1.6	
17.5	52	80	3.97	1.2	
14	60	100	4.28	0.9	
0.25kW					
186.7	11	7.5	1.31	3.6	JRSTD40
140	14	10	1.44	2.8	
93.3	21	15	1.65	1.9	
70	27	20	1.82	1.5	

输出转速 Output speed r/min	输出扭矩 Output torque Nm	传动比 Transmission ratio i	输出轴径向力 Output radial force kN	使用系数 fs	机型代号 Model code
0.25kW					
56	32	25	1.96	1.2	JRSTD40
46.7	36	30	2.08	1.3	
35	44	40	2.29	0.9	
28	37	50	2.47	0.8	
70	26	20	2.5	2.7	JRSTD50
56	32	25	2.69	2.2	
46.7	37	30	2.86	2.3	
35	46	40	3.15	1.7	
28	54	50	3.39	1.4	
23.3	60	60	3.61	1.1	
17.5	72	80	3.97	0.9	
28	56	50	4.44	2.4	JRSTD63
23.3	63	60	4.71	2.0	
17.5	78	80	5.19	1.6	
14	87	100	5.59	1.4	
0.37kW					
186.7	16	7.5	1.31	2.4	JRSTD40
140	21	10	1.44	1.9	
93.3	31	15	1.65	1.3	
70	39	20	1.82	1.0	
56	47	25	1.96	0.8	
46.7	53	30	2.08	0.8	
140	21	10	1.98	3.3	JRSTD50
93.3	31	15	2.27	2.4	
70	40	20	2.5	1.8	
56	48	25	2.69	1.5	
46.7	55	30	2.86	1.5	
35	68	40	3.15	1.1	
28	80	50	3.39	0.9	
23.3	89	60	3.61	0.8	
35	70	40	4.12	2.1	JRSTD63
28	83	50	4.44	1.6	
23.3	94	60	4.71	1.4	
17.5	115	80	5.19	1.1	
14	129	100	5.59	0.9	
0.55kW					
186.7	25	7.5	1.8	2.9	JRSTD50
140	32	10	1.98	2.2	
93.3	46	15	2.27	1.6	
70	59	20	2.5	1.2	
56	71	25	2.69	1.0	
46.7	81	30	2.86	1.0	
35	80	40	3.15	0.9	

输出转速 Output speed r/min	输出扭矩 Output torque Nm	传动比 Transmission ratio i	输出轴径向力 Output radial force kN	使用系数 fs	机型代号 Model code
0.55kW					
70	60	20	3.27	2.2	JRSTD63
56	73	25	3.52	1.8	
46.7	83	30	3.74	1.9	
35	105	40	4.12	1.4	
28	124	50	4.44	1.1	
23.3	140	60	4.71	0.9	
0.75kW					
186.7	34	7.5	1.8	2.1	JRSTD50
140	44	10	1.98	1.6	
93.3	63	15	2.27	1.2	
70	81	20	2.5	0.9	
93.3	63	15	2.97	2.2	JRSTD63
70	83	20	3.27	1.6	
56	100	25	3.52	1.3	
46.7	114	30	3.74	1.4	
35	143	40	4.12	1.0	
56	102	25	4.16	2.0	JRSTD75
46.7	117	30	4.42	2.0	
35	147	40	4.86	1.5	
28	177	50	5.24	1.2	
23.3	200	60	5.56	1.0	
28	184	50	5.79	1.8	JRSTD90
23.3	212	60	6.16	1.5	
17.5	258	80	6.78	1.1	
14	302	100	7.3	0.9	
1.1kW					
186.7	49	7.5	2.35	2.6	JRSTD63
140	65	10	2.59	2.0	
93.3	93	15	2.97	1.5	

输出转速 Output speed r/min	输出扭矩 Output torque Nm	传动比 Transmission ratio i	输出轴径向力 Output radial force kN	使用系数 fs	机型代号 Model code
1.1kW					
70	122	20	3.27	1.1	JRSTD63
56	146	25	3.52	0.9	
46.7	167	30	3.74	1.0	
35	165	40	3.59	0.9	
93.3	95	15	3.5	2.1	JRSTD75
70	123	20	3.86	1.7	
56	150	25	4.16	1.3	
46.7	171	30	4.42	1.3	
35	216	40	4.86	1.0	
28	264	50	4.6	0.9	
23.3	223	60	4.89	0.8	
35	225	40	5.38	1.6	JRSTD90
28	270	50	5.79	1.3	
23.3	311	60	6.16	1.0	
17.5	328	80	6.17	0.9	
28	281	50	7.32	2.3	JRSTD110
23.3	324	60	7.78	1.9	
17.5	402	80	8.57	1.3	
14	473	100	9.23	1.0	
1.5kW					
186.7	67	7.5	2.35	1.9	JRSTD63
140	89	10	2.59	1.5	
93.3	127	15	2.97	1.1	
70	166	20	3.27	0.8	
140	90	10	3.06	2.2	JRSTD75
93.3	130	15	3.5	1.5	
70	168	20	3.86	1.3	
56	205	25	4.16	1.0	
46.7	233	30	4.42	1.0	
70	171	20	4.27	2.1	JRSTD90
56	210	25	4.6	1.6	
46.7	239	30	4.89	1.7	
35	307	40	5.38	1.2	
28	368	50	5.79	0.9	
23.3	424	60	6.16	0.8	
35	319	40	6.8	2.2	JRSTD110
28	384	50	7.32	1.7	
23.3	442	60	7.78	1.4	
17.5	548	80	8.57	0.9	
2.2kW					
186.7	100	7.5	2.78	1.8	JRSTD75
140	132	10	3.06	1.5	
93.3	191	15	3.5	1.0	
70	240	20	3.38	0.9	
46.7	269	30	3.89	0.8	
186.7	101	7.5	3.08	2.9	JRSTD90

输出转速 Output speed r/min	输出扭矩 Output torque Nm	传动比 Transmission ratio i	输出轴径向力 Output radial force kN	使用系数 fs	机型代号 Model code
2.2kW					
140	134	10	3.39	2.3	JRSTD90
93.3	194	15	3.88	1.9	
70	252	20	4.27	1.4	
56	308	25	4.6	1.1	
46.7	351	30	4.89	1.2	
35	433	40	4.9	1.0	
28	393	50	5.28	0.9	
70	255	20	5.39	2.5	JRSTD110
56	315	25	5.81	2.2	
46.7	356	30	6.18	2.0	
35	468	40	6.8	1.5	
28	563	50	7.32	1.2	
23.3	648	60	7.78	1.0	
35	468	40	8.89	2.2	JRSTD130
28	563	50	9.58	1.7	
23.3	648	60	10.18	1.4	
17.5	816	80	11.21	1.0	
14	869	100	10.62	0.8	
28	570	50	13.1	2.5	JRSTD150
23.3	657	60	13.92	1.9	
17.5	816	80	15.32	1.4	
14	960	100	16.5	1.0	
3kW					
186.7	136	7.5	2.78	1.4	JRSTD75
140	180	10	3.06	1.1	
93.3	261	15	3.5	0.8	
186.7	138	7.5	3.08	2.1	JRSTD90
140	182	10	3.39	1.7	
93.3	264	15	3.88	1.4	
70	344	20	4.27	1.0	
56	420	25	4.6	0.8	
46.7	479	30	4.89	0.9	
93.3	264	15	4.9	2.5	JRSTD110
70	348	20	5.39	1.9	
56	430	25	5.81	1.6	
46.7	485	30	6.18	1.5	
35	638	40	6.8	1.1	
28	767	50	7.32	0.9	
56	429	25	7.6	2.2	JRSTD130
46.7	491	30	8.08	2.1	
35	638	40	8.89	1.6	
28	767	50	9.58	1.3	
23.3	884	60	10.18	1.0	
17.5	1113	80	11.21	0.8	

输出转速 Output speed r/min	输出扭矩 Output torque Nm	传动比 Transmission ratio 1	输出轴径向力 Output radial force kN	使用系数 fs	机型代号 Model code
3kW					
28	777	50	13.1	1.8	JRSTD150
23.3	896	60	13.92	1.4	
17.5	1113	80	15.32	1.0	
14	1310	100	16.5	0.8	
4kW					
186.7	182	7.5	2.44	1.0	JRSTD75
140	240	10	3.06	0.8	
186.7	184	7.5	3.08	1.6	JRSTD90
140	243	10	3.39	1.3	
93.3	352	15	3.88	1.0	
70	458	20	4.27	0.8	
140	242	10	4.28	2.5	JRSTD110
93.3	352	15	4.9	1.9	
70	464	20	5.39	1.4	
56	573	25	5.81	1.2	
46.7	647	30	6.18	1.1	
56	573	25	7.6	1.6	JRSTD130
46.7	655	30	8.08	1.6	
35	851	40	8.89	1.2	
28	1023	50	9.58	1.0	
23.3	1179	60	10.18	0.8	
28	1036	50	13.1	1.4	JRSTD150
23.3	1195	60	13.92	1.1	
17.5	1484	80	15.32	0.8	
5.5kW					
186.7	253	7.5	3.89	2.2	JRSTD110
140	334	10	4.28	1.8	
93.3	484	15	4.9	1.4	
70	638	20	5.39	1.0	
56	711	25	5.15	0.9	
140	333	10	5.6	2.5	JRSTD130
93.3	490	15	6.41	1.9	
70	645	20	7.06	1.4	
56	788	25	7.6	1.2	
46.7	900	30	8.08	1.2	
35	1171	40	8.89	0.9	
28	1103	50	8.51	0.8	
70	645	20	9.65	2.0	JRSTD150
56	788	25	10.4	1.5	
46.7	934	30	11.05	1.3	
35	1171	40	12.16	1.3	

输出转速 Output speed r/min	输出扭矩 Output torque Nm	传动比 Transmission ratio 1	输出轴径向力 Output radial force kN	使用系数 fs	机型代号 Model code
5.5kW					
28	1426	50	13.1	1.0	JRSTD150
23.3	1643	60	13.92	0.8	
7.5kW					
186.7	345	7.5	3.89	1.6	JRSTD110
140	455	10	4.28	1.3	
93.3	660	15	4.9	1.0	
186.7	349	7.5	5.09	2.1	JRSTD130
140	455	10	5.6	1.8	
93.3	668	15	6.41	1.4	
70	880	20	7.06	1.0	
56	1074	25	7.6	0.9	
46.7	1228	30	8.08	0.8	
35	1596	40	8.89	0.7	
70	880	20	9.65	1.5	JRSTD150
56	1074	25	10.4	1.1	
46.7	1274	30	11.05	0.9	
35	1596	40	12.16	1.0	
11kW					
186.7	512	7.5	6.96	2.3	JRSTD150
140	675	10	7.66	1.8	
93.3	990	15	8.77	1.3	
70	1291	20	9.65	1.0	
56	1576	25	10.4	0.8	
15kW					
186.7	698	7.5	6.96	1.7	JRSTD150
140	921	10	7.66	1.3	
93.3	1351	15	8.77	0.9	
70	1760	20	9.65	0.7	

5.2 双级减速机(法兰输入，输入转速1400r/min)/(配4极电机)

Double step gearbox (flange input,input speed is 1400r/min)/(matched with 4 poles motor)

输出转速 Output speed r/min	输出扭矩 Output torque Nm	总传动比 General transmission ratio i	高速级传动比 High speed transmission ratio i_1	低速级传动比 Low speed transmission ratio i_2	输出轴径向力 Output radial force kN	使用系数 fs	组合机型规格 Combination model Size
0.06kW							
14	25	100	10	10	1.62	1.3	25/30
9.3	32	150	10	15	1.83	0.9	
7.0	41	200	10	20	1.83	0.7	
5.6	44	250	10	25	1.83	0.8	
4.7	59	300	10	30	3.49	1.2	25/40
3.5	71	400	10	40	3.49	0.9	
2.8	82	500	20	25	3.49	0.7	
2.3	101	600	20	30	3.49	0.6	
1.9	116	750	25	30	3.49	0.5	
1.6	143	900	30	30	3.49	0.5	
1.2	171	1200	30	40	3.49	0.4	
0.9	197	1500	50	30	3.49	0.3	
0.78	217	1800	60	30	3.49	0.3	
0.6	268	2400	60	40	3.49	0.2	
0.5	324	3000	60	50	3.49	0.2	
0.4	294	4000	50	80	3.49	0.1	
0.3	356	5000	50	100	3.49	0.1	
4.7	57	300	10	30	3.49	1.3	30/40
3.5	70	400	10	40	3.49	0.9	
2.8	96	500	20	25	3.49	0.6	
2.3	104	600	20	30	3.49	0.7	
1.9	121	750	25	30	3.49	0.6	
1.6	139	900	30	30	3.49	0.5	
1.2	166	1200	30	40	3.49	0.4	
0.9	196	1500	50	30	3.49	0.4	
0.78	218	1800	60	30	3.49	0.3	
0.58	261	2400	60	40	3.49	0.2	
0.4	300	3200	80	40	3.49	0.2	
0.4	279	4000	50	80	3.49	0.1	
0.28	338	5000	50	100	3.49	0.1	
1.6	141	900	30	30	4.84	1.0	30/50
1.2	169	1200	30	40	4.84	0.7	
0.93	199	1500	50	30	4.84	0.7	
0.78	222	1800	60	30	4.84	0.7	
0.6	266	2400	60	40	4.84	0.5	
0.5	307	3000	60	50	4.84	0.4	
0.35	288	4000	50	80	4.84	0.3	
0.29	311	4800	60	80	4.84	0.3	
0.9	203	1500	30	50	6.27	1.1	30/63
0.78	225	1800	30	60	6.27	0.9	
0.58	276	2400	60	40	6.27	0.8	

输出转速 Output speed r/min	输出扭矩 Output torque Nm	总传动比 General transmission ratio i	高速级传动比 High speed transmission ratio i_1	低速级传动比 Low speed transmission ratio i_2	输出轴径向力 Output radial force kN	使用系数 fs	组合机型规格 Combination model Size
0.06kW							
0.47	319	3000	60	50	6.27	0.7	30/63
0.35	306	4000	50	80	6.27	0.6	
0.28	360	5000	50	100	6.27	0.4	
0.6	330	2400	60	40	7.38	1.1	40/75
0.47	377	3000	60	50	7.38	0.8	
0.35	355	4000	50	80	7.38	0.7	
0.28	419	5000	50	100	7.38	0.5	
0.5	405	3000	60	50	8.18	1.4	40/90
0.35	365	4000	50	80	8.18	1.3	
0.28	431	5000	50	100	8.18	1.0	
0.09kW							
14	37	100	10	10	1.62	0.8	25/30
9.3	49	150	10	15	1.83	0.6	
7.0	62	200	10	20	1.83	0.5	
5.6	66	250	10	25	1.83	0.5	
4.7	75	300	10	30	1.83	0.4	
3.5	107	400	10	40	1.83	0.3	
2.8	115	500	20	25	1.83	0.2	
2.3	135	600	20	30	1.83	0.2	
1.9	151	750	25	30	1.83	0.2	
1.6	178	900	30	30	1.83	0.2	
1.2	212	1200	30	40	1.83	0.1	
0.9	247	1500	50	30	1.83	0.1	
0.78	304	1800	60	30	1.83	0.1	
0.58	340	2400	60	40	1.83	0.1	
0.47	405	3000	60	50	1.83	0.1	
4.7	88	300	10	30	3.49	0.8	30/40
3.5	107	400	10	40	4.84	1.2	30/50
2.8	123	500	10	50	4.84	1.0	
2.3	159	600	20	30	4.84	0.9	
1.9	185	750	25	30	4.84	0.8	
1.6	212	900	30	30	4.84	0.7	
1.6	200	900	15	60	6.27	1.0	30/63
1.2	263	1200	30	40	6.27	0.9	
0.93	305	1500	30	50	6.27	0.7	
0.9	359	1500	50	30	7.38	1.1	40/75
0.78	404	1800	60	30	7.38	1	
0.58	496	2400	60	40	7.38	0.7	
0.5	608	3000	60	50	8.18	0.9	40/90
0.35	548	4000	50	80	8.18	0.8	

输出转速 Output speed r/min	输出扭矩 Output torque Nm	总传动比 General transmission ratio i	高速级传动比 High speed transmission ratio i_1	低速级传动比 Low speed transmission ratio i_2	输出轴径向力 Output radial force kN	使用系数 fs	组合机型规格 Combination model Size
0.12kW							
4.7	118	300	10	30	4.84	1.2	30/50
3.5	142	400	10	40	4.84	0.9	
2.8	164	500	10	50	4.84	0.7	
2.8	171	500	10	50	6.27	1.3	30/63
2.3	208	600	15	40	6.27	1.1	
1.9	241	750	15	50	6.27	0.9	
1.6	324	900	30	30	7.38	1.2	40/75
1.2	399	1200	30	40	7.38	0.9	
0.78	546	1800	30	60	8.18	0.9	40/90
0.58	695	2400	60	40	8.18	0.9	
0.5	883	3000	60	50	10.32	1.2	50/110
0.35	784	4000	50	80	10.32	1.0	
0.28	928	5000	50	100	10.32	0.8	
0.18kW							
3.5	221	400	10	40	6.27	1.0	30/63
2.8	257	500	10	50	6.27	0.8	
2.3	362	600	20	30	7.38	1.1	40/75
1.9	435	750	25	30	7.38	0.9	
1.6	487	900	30	30	7.38	0.8	
1.2	629	1200	30	40	8.18	1.0	40/90
0.93	735	1500	30	50	8.18	0.8	
0.78	860	1800	60	30	10.32	1.5	50/110
0.58	1113	2400	60	40	10.32	1.1	
0.25kW							
3.5	336	400	10	40	7.38	1.1	40/75
2.8	384	500	10	50	7.38	0.8	
2.3	511	600	15	40	8.18	1.2	40/90
1.9	598	750	15	50	8.18	0.9	
1.6	667	900	15	60	8.18	0.8	
1.2	943	1200	30	40	10.32	1.3	50/110
0.93	1064	1500	50	30	10.32	1.2	
0.78	1195	1800	60	30	10.32	1.1	
0.6	1624	2400	60	40	13.5	1.0	63/130
0.47	1935	3000	60	50	13.5	0.8	
0.35	2046	4000	50	80	13.5	0.6	
0.28	2430	5000	50	100	13.5	0.5	

输出转速 Output speed r/min	输出扭矩 Output torque Nm	总传动比 General transmission ratio i	高速级传动比 High speed transmission ratio i_1	低速级传动比 Low speed transmission ratio i_2	输出轴径向力 Output radial force kN	使用系数 fs	组合机型规格 Combination model Size
0.25kW							
0.78	1199	1800	60	30	18	1.8	63/150
0.6	1446	2400	60	40	18	1.8	
0.5	1713	3000	60	50	18	1.4	
0.4	2026	4000	50	80	18	0.9	
0.3	2251	5000	50	100	18	0.7	
0.37kW							
4.7	405	300	10	30	7.38	1.0	40/75
3.5	498	400	10	40	7.38	0.7	
4.7	401	300	7.5	40	8.18	1.5	40/90
3.5	523	400	10	40	8.18	1.2	
2.8	611	500	10	50	8.18	0.9	
2.3	757	600	15	40	8.18	0.8	
1.9	949	750	25	30	10.32	1.3	50/110
1.6	1079	900	30	30	10.32	1.2	
1.2	1396	1200	30	40	10.32	0.8	
0.9	1674	1500	50	30	13.5	1.1	63/130
0.78	1887	1800	60	30	13.5	0.9	
0.78	1774	1800	60	30	18	1.2	63/150
0.6	2141	2400	60	40	18	1.2	
0.5	2535	3000	60	50	18	0.9	
0.55kW							
4.7	638	300	10	30	10.32	2.0	50/110
3.5	826	400	10	40	10.32	1.4	
2.8	984	500	10	50	10.32	1.1	
2.3	1181	600	15	40	10.32	1.0	
1.9	1411	750	25	30	10.32	0.9	
2.8	995	500	10	50	13.5	1.6	63/130
1.9	1471	750	25	30	13.5	1.2	
1.2	2132	1200	30	40	13.5	0.8	
0.78	2637	1800	60	30	18	0.8	63/150
0.6	3182	2400	60	40	18	0.8	
0.75kW							
4.7	871	300	10	30	10.32	1.5	50/110
3.5	1126	400	10	40	10.32	1.1	

输出转速 Output speed r/min	输出扭矩 Output torque Nm	总传动比 General transmission ratio i	高速级传动比 High speed transmission ratio i_1	低速级传动比 Low speed transmission ratio i_2	输出轴径向力 Output radial force kN	使用系数 fs	组合机型规格 Combination model Size
0.75kW							
2.8	1357	500	10	50	13.5	1.1	63/130
2.3	1631	600	15	40	13.5	1.0	
1.9	2005	750	25	30	13.5	0.9	
1.6	2283	900	30	30	13.5	0.8	
2.8	1290	500	10	50	18	1.8	63/150
2.3	1529	600	15	40	18	1.7	
1.9	1783	750	25	30	18	1.3	
1.6	2215	900	30	30	18	0.9	
1.2	2680	1200	30	40	18	1.0	
1.1kW							
4.7	1312	300	10	30	13.5	1.3	63/130
3.5	1671	400	10	40	13.5	1.0	
2.8	1991	500	10	50	13.5	0.8	
9.3	752	150	10	15	18	3.1	63/150
7.0	966	200	10	20	18	2.4	
5.6	1175	250	10	25	18	1.7	
4.7	1364	300	10	30	18	1.7	
3.5	1619	400	10	40	18	1.6	
2.8	1893	500	10	50	18	1.2	
2.3	2242	600	15	40	18	1.2	
1.9	2616	750	25	30	18	0.9	
1.5kW							
4.7	1789	300	10	30	13.5	1.0	63/130
3.5	2279	400	10	40	13.5	0.7	
9.3	1026	150	10	15	18	2.3	63/150
7.0	1317	200	10	20	18	1.8	
5.6	1602	250	10	25	18	1.3	
4.7	1860	300	10	30	18	1.3	
3.5	2208	400	10	40	18	1.2	
2.8	2582	500	10	50	18	0.9	
2.3	3057	600	15	40	18	0.9	

5.3 单级减速机(轴伸输入，输入转速1400r/min)
Single step gearbox (shaft extend input,input speed is 1400r/min)

输入轴功率 Input Power kW	输出转速 Output speed r/min	输出扭矩 Output torque Nm	传动比 Transmission ratio i	输出轴径向力 Output radial force kN	输入轴径向力 Input radial force kN	机型代号 Model code
0.64	280	19	5	0.59	0.15	JRST30
0.4	186.7	18	7.5	0.68	0.15	
0.3	140	18	10	0.75	0.16	
0.2	93.3	18	15	0.86	0.16	
0.2	70	18	20	0.94	0.19	
0.2	56	21	25	1.02	0.21	
0.2	46.7	20	30	1.08	0.21	
0.1	35	18	40	1.19	0.21	
0.1	28	17	50	1.28	0.21	
0.1	23.3	16	60	1.36	0.21	
0.1	17.5	13	80	1.5	0.21	
1.19	280	36	5	1.15	0.25	JRST40
0.9	186.7	40	7.5	1.31	0.29	
0.7	140	40	10	1.44	0.33	
0.5	93.3	40	15	1.65	0.33	
0.4	70	39	20	1.82	0.35	
0.3	56	38	25	1.96	0.35	
0.3	46.7	45	30	2.08	0.35	
0.2	35	41	40	2.29	0.35	
0.2	28	39	50	2.47	0.35	
0.2	23.3	36	60	2.63	0.35	
0.1	17.5	33	80	2.89	0.35	
0.1	14	29	100	3.11	0.35	
2.24	280	68	5	1.58	0.35	JRST50
1.6	186.7	71	7.5	1.8	0.4	
1.2	140	72	10	1.98	0.49	
0.9	93.3	74	15	2.27	0.49	
0.7	70	73	20	2.5	0.49	
0.5	56	70	25	2.69	0.49	
0.6	46.7	84	30	2.86	0.49	
0.4	35	76	40	3.15	0.49	
0.3	28	73	50	3.39	0.49	
0.3	23.3	68	60	3.61	0.49	
0.2	17.5	65	80	3.97	0.49	
0.2	14	55	100	4.28	0.49	
2.8	186.7	128	7.5	2.35	0.5	JRST63
2.2	140	130	10	2.59	0.57	
1.6	93.3	140	15	2.97	0.61	
1.2	70	135	20	3.27	0.66	
1.0	56	130	25	3.52	0.70	
1.1	46.7	160	30	3.74	0.70	
0.8	35	145	40	4.12	0.70	
0.6	28	135	50	4.44	0.70	
0.5	23.3	130	60	4.71	0.70	

输入轴功率 Input Power kW	输出转速 Output speed r/min	输出扭矩 Output torque Nm	传动比 Transmission ratio i	输出轴径向力 Output radial force kN	输入轴径向力 Input radial force kN	机型代号 Model code
0.4	17.5	122	80	5.19	0.70	JRST63
0.3	14	118	100	5.59	0.70	
4.1	186.7	185	7.5	2.78	0.70	JRST75
3.2	140	195	10	3.06	0.83	
2.3	93.3	200	15	3.50	0.85	
1.9	70	210	20	3.86	0.98	
1.5	56	200	25	4.16	0.98	
1.5	46.7	230	30	4.42	0.98	
1.1	35	220	40	4.86	0.98	
0.9	28	210	50	5.24	0.98	
0.8	23.3	200	60	5.56	0.98	
0.6	17.5	190	80	6.13	0.98	
0.5	14	180	100	6.60	0.98	
6.3	186.7	290	7.5	3.08	0.90	JRST90
5.1	140	310	10	3.39	1.08	
4.1	93.3	360	15	3.88	1.25	
3.1	70	355	20	4.27	1.27	
2.4	56	340	25	4.60	1.27	
2.6	46.7	410	30	4.89	1.27	
1.8	35	360	40	5.38	1.27	
1.4	28	340	50	5.79	1.27	
1.1	23.3	320	60	6.16	1.27	
0.8	17.5	285	80	6.78	1.27	
0.7	14	270	100	7.30	1.27	
12	186.7	552	7.5	3.89	1.20	JRST110
9.8	140	598	10	4.28	1.46	
7.5	93.3	656	15	4.90	1.60	
5.6	70	644	20	5.39	1.70	
4.7	56	679	25	5.81	1.70	
4.5	46.7	725	30	6.18	1.70	
3.3	35	702	40	6.80	1.70	
2.6	28	660	50	7.32	1.70	
2.1	23.3	616	60	7.78	1.70	
1.4	17.5	515	80	8.57	1.70	
1.1	14	483	100	9.23	1.70	
16.1	186.7	750	7.5	5.09	1.50	JRST130
13.5	140	820	10	5.60	1.84	
10.3	93.3	920	15	6.41	2.07	
7.8	70	910	20	7.06	2.10	
6.5	56	930	25	7.60	2.10	

输入轴功率 Input Power kW	输出转速 Output speed r/min	输出扭矩 Output torque Nm	传动比 Transmission ratio i	输出轴径向力 Output radial force kN	输入轴径向力 Input radial force kN	机型代号 Model code
6.4	46.7	1040	30	8.08	2.10	JRST130
4.9	35	1050	40	8.89	2.10	
3.8	28	980	50	9.58	2.10	
3.1	23.3	900	60	10.18	2.10	
2.3	17.5	840	80	11.21	2.10	
1.7	14	740	100	12.07	2.10	
25.8	186.7	1200	7.5	6.96	1.95	JRST150
20.2	140	1240	10	7.66	2.26	
13.9	93.3	1250	15	8.77	2.28	
11.1	70	1300	20	9.65	2.67	
8.4	56	1200	25	10.40	2.80	
7.1	46.7	1200	30	11.05	2.80	
7.3	35	1550	40	12.16	2.80	
5.4	28	1400	50	13.10	2.80	
4.2	23.3	1260	60	13.92	2.80	
3.1	17.5	1150	80	15.32	2.80	
2.3	14	1000	100	16.50	2.80	

5.4 双级减速机(轴伸输入，输入转速1400r/min)
Double step gearbox (shaft extend input,input speed is 1400r/min)

输入轴功率 Input Power kW	输出转速 Output speed r/min	输出扭矩 Output torque Nm	传动比 Transmission ratio i	输出轴径向力 Output radial force kN	输入轴径向力 Input radial force kN	机型代号 Model code
0.1	4.7	73	300	3.49	0.21	JRSTE30/40
0.1	3.5	65	400	3.49	0.21	
0.08	2.8	61	500	3.49	0.21	
0.06	2.3	73	600	3.49	0.21	
0.04	1.9	73	750	3.49	0.21	
0.03	0.6	73	900	3.49	0.21	
0.02	1.2	65	1200	3.49	0.21	
0.02	0.9	73	1500	3.49	0.21	
0.02	0.78	73	1800	3.49	0.21	
0.01	0.58	65	2400	3.49	0.21	
0.01	0.4	65	3200	3.49	0.21	
0.01	0.35	33	4000	3.49	0.21	
0.01	0.28	29	5000	3.49	0.21	
0.15	4.7	145	300	4.84	0.21	JRSTE30/50
0.1	3.5	124	400	4.84	0.21	
0.1	2.8	120	500	4.84	0.21	
0.1	2.3	145	600	4.84	0.21	
0.1	1.9	145	750	4.84	0.21	
0.1	1.6	145	900	4.84	0.21	
0.08	1.2	124	1200	4.84	0.21	
0.06	0.93	145	1500	4.84	0.21	
0.04	0.78	145	1800	4.84	0.21	
0.03	0.6	124	2400	4.84	0.21	
0.02	0.5	120	3000	4.84	0.21	
0.02	0.35	82	4000	4.84	0.21	
0.02	0.29	82	4800	4.84	0.21	
0.24	4.7	230	300	6.27	0.21	JRSTE30/63
0.2	3.5	230	400	6.27	0.21	
0.2	2.8	216	500	6.27	0.21	
0.13	2.3	230	600	6.27	0.21	
0.11	1.9	216	750	6.27	0.21	
0.1	1.6	198	900	6.27	0.21	
0.1	1.2	230	1200	6.27	0.21	
0.1	0.93	216	1500	6.27	0.21	
0.1	0.78	198	1800	6.27	0.21	
0.1	0.58	230	2400	6.27	0.21	
0.08	0.47	216	3000	6.27	0.21	
0.06	0.35	172	4000	6.27	0.21	
0.04	0.28	150	5000	6.27	0.21	
0.4	4.7	390	300	7.38	0.35	JRSTE40/75
0.3	3.5	360	400	7.38	0.35	
0.21	2.8	320	500	7.38	0.35	

输入轴功率 Input Power kW	输出转速 Output speed r/min	输出扭矩 Output torque Nm	传动比 Transmission ratio i	输出轴径向力 Output radial force kN	输入轴径向力 Input radial force kN	机型代号 Model code
0.2	2.3	390	600	7.38	0.35	JRSTE40/75
0.2	1.9	390	750	7.38	0.35	
0.14	1.6	390	900	7.38	0.35	
0.11	1.2	360	1200	7.38	0.35	
0.1	0.93	390	1500	7.38	0.35	
0.1	0.78	390	1800	7.38	0.35	
0.1	0.58	360	2400	7.38	0.35	
0.1	0.47	320	3000	7.38	0.35	
0.08	0.35	250	4000	7.38	0.35	
0.06	0.28	230	5000	7.38	0.35	
0.6	4.7	610	300	8.18	0.35	JRSTE40/90
0.43	3.5	610	400	8.18	0.35	
0.34	2.8	560	500	8.18	0.35	
0.3	2.3	610	600	8.18	0.35	
0.23	1.9	560	750	8.18	0.35	
0.2	1.6	505	900	8.18	0.35	
0.2	1.2	610	1200	8.18	0.35	
0.14	0.93	560	1500	8.18	0.35	
0.11	0.78	505	1800	8.18	0.35	
0.11	0.58	610	2400	8.18	0.35	
0.1	0.47	560	3000	8.18	0.35	
0.1	0.35	460	4000	8.18	0.35	
0.1	0.28	410	5000	8.18	0.35	
1.1	4.7	1265	300	10.32	0.49	JRSTE50/110
0.8	3.5	1185	400	10.32	0.49	
0.61	2.8	1100	500	10.32	0.49	
0.6	2.3	1185	600	10.32	0.49	
0.5	1.9	1265	750	10.32	0.49	
0.43	1.6	1265	900	10.32	0.49	
0.31	1.2	1186	1200	10.32	0.49	
0.3	0.93	1265	1500	10.32	0.49	
0.3	0.78	1265	1800	10.32	0.49	
0.2	0.58	1185	2400	10.32	0.49	
0.15	0.47	1100	3000	10.32	0.49	
0.13	0.35	819	4000	10.32	0.49	
0.1	0.28	746	5000	10.32	0.49	
1.5	4.7	1760	300	13.5	0.7	JRSTE63/130
1.1	3.5	1650	400	13.5	0.7	
0.9	2.8	1550	500	13.5	0.7	
0.8	2.3	1650	600	13.5	0.7	
0.7	1.9	1760	750	13.5	0.7	

输入轴功率 Input Power kW	输出转速 Output speed r/min	输出扭矩 Output torque Nm	传动比 Transmission ratio i	输出轴径向力 Output radial force kN	输入轴径向力 Input radial force kN	机型代号 Model code
0.6	1.6	1760	900	13.5	0.7	JRSTE63/130
0.4	1.2	1650	1200	13.5	0.7	
0.4	0.93	1760	1500	13.5	0.7	
0.3	0.78	1760	1800	13.5	0.7	
0.3	0.58	1650	2400	13.5	0.7	
0.2	0.47	1550	3000	13.5	0.7	
0.1	0.35	1220	4000	13.5	0.7	
0.1	0.28	1100	5000	13.5	0.7	
3.4	9.3	2340	150	18	0.7	JRSTE63/150
2.7	7.0	2340	200	18	0.7	
1.9	5.6	2050	250	18	0.7	
1.9	4.7	2340	300	18	0.7	
1.8	3.5	2670	400	18	0.7	
1.4	2.8	2330	500	18	0.7	
1.3	2.3	2670	600	18	0.7	
1.0	1.9	2330	750	18	0.7	
0.7	1.6	2100	900	18	0.7	
0.7	1.2	2670	1200	18	0.7	
0.4	0.78	2100	1800	18	0.7	
0.5	0.6	2670	2400	18	0.7	
0.3	0.5	2330	3000	18	0.7	
0.2	0.4	1880	4000	18	0.7	
0.2	0.3	1650	5000	18	0.7	

6. 安装尺寸
Mounting Dimensions

6.1 单级蜗杆减速机
Single Step Worm Gear Box

IEC电机输入法兰
IEC Motor Input Flange

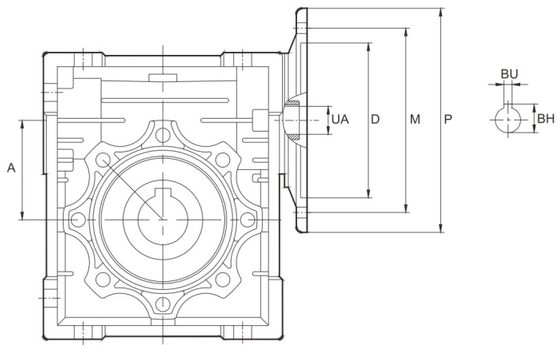

中心距 Center Distance A	电机法兰 Flange Specification 法兰规格	D	M	P	BU	BH	输入轴孔直径UA The Hole Diameter of Shaft 传动比 i Transmission Ratio 5	7.5	10	15	20	25	30	40	50	60	80	100
25	56B14	50	65	80	3	10.4	-	9	9	9	9	-	9	9	9	9	-	-
30	63B5	95	115	140	4	12.8	11	11	11	11	11	11	11	11	11	-	-	-
	63B14	60	75	90														
	56B5	80	100	120	3	10.4	9	9	9	9	9	9	9	9	9	9	9	-
	56B14	50	65	80														
40	71B5	110	130	160	5	16.3	14	14	14	14	14	14	14	14	-	-	-	-
	71B14	70	85	105														
	63B5	95	115	140	4	12.8	11	11	11	11	11	11	11	11	11	11	11	-
	63B14	60	75	90														
	56B5	80	100	120	3	10.4	-	-	-	-	-	-	-	-	9	9	9	9
50	80B5	130	165	200	6	21.8	19	19	19	19	19	19	19	-	-	-	-	-
	80B14	80	100	120														
	71B5	110	130	160	5	16.3	14	14	14	14	14	14	14	14	14	14	14	-
	71B14	70	85	105														
	63B5	95	115	140	4	12.8	-	-	-	-	-	-	-	11	11	11	11	11
63	90B5	130	165	200	8	27.3	-	24	24	24	24	24	24	-	-	-	-	-
	90B14	95	115	140														
	80B5	130	165	200	6	21.8	-	-	-	19	19	19	19	19	19	19	-	-
	80B14	80	100	120														
	71B5	110	130	160	5	16.3	-	-	-	-	-	-	-	14	14	14	14	14
	71B14	70	85	105														
75	100/112B5	180	215	250	8	31.3	-	28	28	28	-	-	-	-	-	-	-	-
	100/112B14	110	130	160														
	90B5	130	165	200	8	27.3	-	-	24	24	24	24	24	24	-	-	-	-
	90B14	95	115	140														
	80B5	130	165	200	6	21.8	-	-	-	-	-	19	19	19	19	19	19	19
	80B14	80	100	120														
90	100/112B5	180	215	250	8	31.3	-	28	28	28	28	28	28	-	-	-	-	-
	100/112B14	110	130	160														
	90B5	130	165	200	8	27.3	-	-	-	-	24	24	24	24	24	24	-	-
	90B14	95	115	140														
	80B5	130	165	200	6	21.8	-	-	-	-	-	-	-	-	19	19	19	19
	80B14	80	100	120														
110	132B5	230	265	300	10	41.1	-	38	38	38	38	-	-	-	-	-	-	-
	100/112B5	180	215	250	8	31.3	-	-	28	28	28	28	28	28	28	28	-	-
	100/112B14	110	130	160														
	90B5	130	165	200	8	27.3	-	-	-	-	-	-	-	24	24	24	24	24
	90B14	95	115	140														
130	132B5	230	265	300	10	41.1	-	38	38	38	38	38	38	38	-	-	-	-
	100/112B5	180	215	250	8	31.3	-	-	-	-	-	28	28	28	28	28	28	28
	100/112B14	110	130	160														
150	160B5	250	300	350	12	45.3	-	42	42	42	42	42	-	-	-	-	-	-
	132B5	230	265	300	10	41.3	-	-	-	-	38	38	38	38	38	38	-	-
	100/112B5	180	215	250	8	31.3	-	-	-	-	-	-	-	-	28	28	28	28

JRSTD(B)安装尺寸
JRSTD(B) Mounting Dimensions

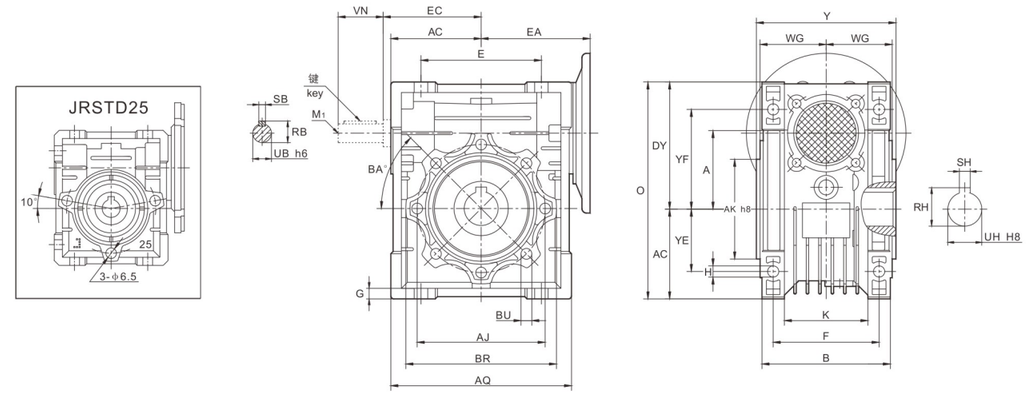

	25	30	40	50	63	75	90	110	130	150
A	25	30	40	50	63	75	90	110	130	150
AC	35	40	50	60	72	86	103	127.5	147.5	170
AJ	55	65	75	85	95	115	130	165	215	215
AK	45	55	60	70	80	95	110	130	180	180
AQ	70	80	100	120	144	172	206	252	292	340
B	42	56	71	85	103	112	130	144	155	185
BA	见上图 See Above	0°	45°	45°	45°	45°	45°	45°	45°	45°
BR	65	75	87	100	110	140	160	200	250	250
BU	见上图 See Above	M6×11(n.4)	M6× 8 (n.4)	M8×10(n.4)	M8×14(n.8)	M8×14(n.8)	M10×18(n.8)	M10×18(n.8)	M12×21(n.8)	M12×21(n.8)
DY	48	57	71.5	84	102	119	135	167.5	187.5	230
E	45	54	70	80	100	120	140	170	200	240
EA	45	55	71	80	95	112.5	130	160	180	210
EC	-	45	53	64	75	90	108	135	155	175
F	34	44	60	70	85	90	100	115	120	145
G	5	5.5	6.5	7	8	10	11	15	15	18
H	6	6.5	7	8.5	8.5	11	13	14	16	18
K	22	32	43	49	67	72	74	-	-	-
M1	-	-	-	M6	M6	M8	M8	M10	M10	M12
O	83	97	121.5	144	174	205	238	295	335	400
RB	-	10.2	12.5	16	21.5	27	27	31	33	38
RH	12.8	16.3	20.8	28.3	28.3	31.3	38.3	45.3	48.8	53.8
SB	-	3	4	5	6	8	8	8	8	10
SH	4	5	6	8	8	8	10	12	14	14
UB	-	9	11	14	19	24	24	28	30	35
UH	11	14	18	25	25	28	35	42	45	50
VN	-	20	23	30	40	50	50	60	80	80
WG	22.5	29	36.5	43.5	53	57	67	74	81	96
Y	50	63	78	92	112	120	140	155	170	200
YE	22	27	35	40	50	60	70	85	100	120
YF	35.5	44	55	64	80	93	102	125	140	180
重量(kg) Weight(kg)	0.7	1.2	2.3	3.5	6.2	9	13	35	48	84

NEMA电机输入法兰
NEMA Motor Input Flange

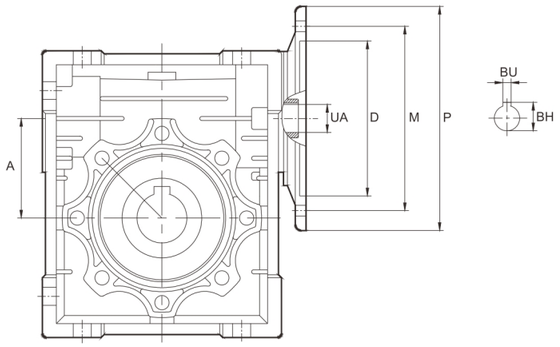

中心距 Center Distance A	法兰规格 Flange Specification	电机法兰 Flange Specification						输入轴孔径UA The Hole Diameter of Shaft 传动比i Transmission Ratio										
		D	M	P	M1	BU	BH	7.5	10	15	20	25	30	40	50	60	80	100
30	48C	76.2	95.3	142.9	8.2	3.18	14.2	12.7	12.7	12.7	12.7	12.7	12.7	12.7	12.7	12.7	12.7	-
40	56C	114.3	149.4	165.1	10.5	4.78	18.1	15.88	15.88	15.88	15.88	15.88	15.88	15.88	15.88	15.88	15.88	15.88
50	56C	114.3	149.4	165.1	10.5	4.78	18.1	15.88	15.88	15.88	15.88	15.88	15.88	15.88	15.88	15.88	15.88	15.88
63	56C	114.3	149.4	165.1	10.5	4.78	18.1	15.88	15.88	15.88	15.88	15.88	15.88	15.88	15.88	15.88	15.88	15.88
	140TC					4.78	24.6	22.23	22.23	22.23	22.23	22.23	22.23	22.23	22.23	-	-	-
75	56C	114.3	149.4	165.1	10.5	4.78	18.1	15.88	15.88	15.88	15.88	15.88	15.88	15.88	15.88	15.88	15.88	15.88
	140TC					4.78	24.6	22.23	22.23	22.23	22.23	22.23	22.23	22.23	22.23	22.23	-	-
	180TC	215.9	184.2	228.6	10.5	6.35	31.5	28.58	28.58	28.58	28.58	-	-	-	-	-	-	-
90	56C	114.3	149.4	165.1	10.5	4.78	18.1	15.88	15.88	15.88	15.88	15.88	15.88	15.88	15.88	15.88	15.88	15.88
	140TC					4.78	24.6	22.23	22.23	22.23	22.23	22.23	22.23	22.23	22.23	22.23	22.23	22.23
	180TC	215.9	184.2	228.6	10.5	6.35	31.5	28.58	28.58	28.58	28.58	28.58	28.58	28.58	-	-	-	-
110	140TC	114.3	149.4	165.1	10.5	4.78	24.6	22.23	22.23	22.23	22.23	22.23	22.23	22.23	22.23	22.23	22.23	22.23
	180TC	215.9	184.2	228.6	14	6.35	31.5	28.58	28.58	28.58	28.58	28.58	28.58	28.58	-	-	-	-
	210TC	215.9	184.2	228.6	14	7.95	38.6	34.93	34.93	34.93	34.93	34.93	34.93	34.93	-	-	-	-
130	140TC	114.3	149.4	165.1	10.5	4.78	24.6	-	-	-	-	-	-	-	-	-	22.23	22.23
	180TC	215.9	184.2	228.6	14	6.35	31.5	-	-	-	-	-	28.58	28.58	28.58	28.58	28.58	28.58
	210TC				14	7.95	38.6	34.93	34.93	34.93	34.93	34.93	34.93	34.93	-	-	-	-
150	180C	215.9	184.2	228.6	14	6.35	31.5	-	-	-	-	-	28.58	28.58	28.58	28.58	28.58	28.58
	210TC				14	7.95	38.6	34.93	34.93	34.93	34.93	34.93	34.93	34.93	-	-	-	-

JRWN(B) 英制产品安装尺寸
JRWN(B) Mounting Dimensions

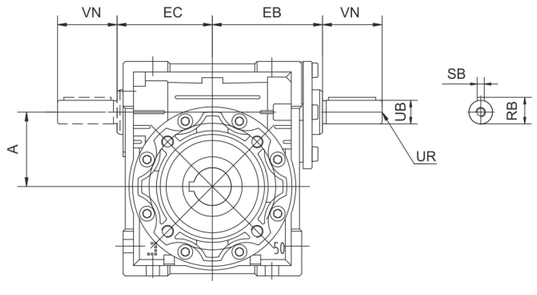

A	EB	EC	UR	VN	UB	公差 tolerance	SB	RB	公差 tolerance
30	50	45	/	30	9.525	0 −0.009	2.38	10.7	0 −0.15
40	61	53	1/4"–20	30	12.7	0 −0.011	3.175	14.1	0 −0.15
50	74	64	1/4"–20	40	15.88	0 −0.011	4.77	17.9	0 −0.15
63	90	75	1/4"–20	50	19.05	0 −0.013	4.77	21.1	0 −0.15
75	105	90	1/4"–20	60	22.23	0 −0.013	4.77	24.3	0 −0.15
90	125	108	1/4"–20	60	22.23	0 −0.013	4.77	24.3	0 −0.15
110	142	135	3/8"–16	70	28.58	0 −0.013	6.35	31.3	0 −0.15
130	162	155	1/2"–13	80	31.75	0 −0.016	6.35	34.5	0 −0.15
150	195	175	1/2"–13	80	34.925	0 −0.016	7.94	38.4	0 −0.15

JRWND英制产品重要接口尺寸表
JRWND Important Connect Size

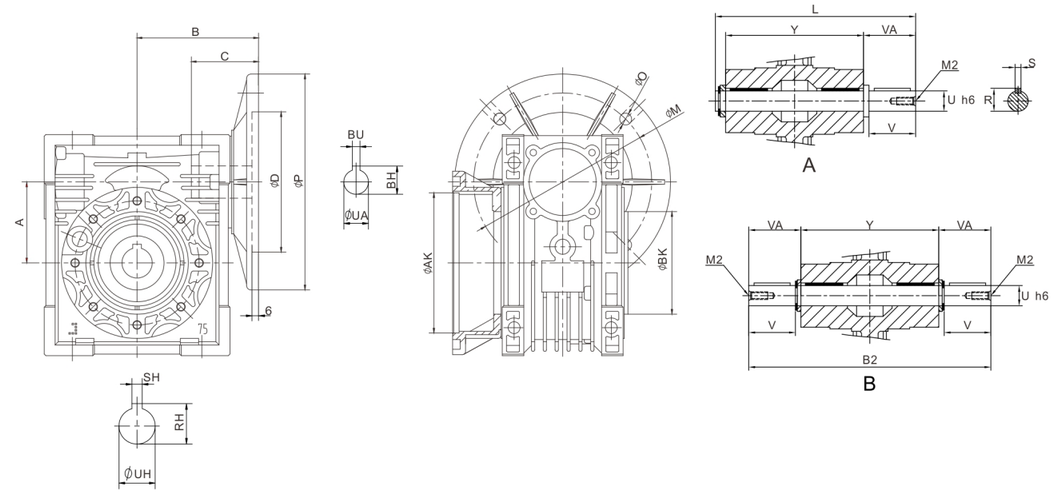

A	NEMA	B	C	UA	公差 Tolerance	BU	BH	D	P	M	O	UH	公差 Tolerance	RH	SH	AK	公差 Tolerance	BK	公差 Tolerance	V	VA	Y	U	公差 Tolerance	R	S	B2	L	M2
30	48C	67	46	12.7	+0.038 +0.013	3.18	14.2	76.2	142.9	95.3	8.2	15.88	+0.018 0	18.1	4.78	50	+0.046 0	55	0 −0.046	40	42.4	63	15.88	0 -0.011	17.8	4.78	148	112	1/4″–20
40	56C	80	55	15.88	+0.038 +0.013	4.78	18.1	114.3	165.1	149.4	10.5	19.05	+0.025 0	21.3	4.78	60	+0.046 0	60	0 −0.046	50	53	78	19.05	0 −0.011	21.1	4.76	184	138	1/4″–20
50	56C	90	55	15.88	+0.038 +0.013	4.78	18.1	114.3	165.1	149.4	10.5	25.40	+0.025 0	28.3	6.35	70	+0.046 0	70	0 −0.046	50	53.5	92	25.4	0 −0.013	28.2	6.35	199	153	3/8″–16
63	56C	105	55	15.88	+0.038 +0.013	4.78	18.1	114.3	165.1	149.4	10.5	28.58	+0.025 0	31.5	6.35	115	+0.054 0	80	0 −0.054	60	63.5	112	28.58	0 −0.013	31.2	6.35	239	183	3/8″–16
	140TC	105	59	22.23	+0.038 +0.013	4.78	24.6	114.3	165.1	149.4	10.5	28.58	+0.025 0	31.5	6.35	115	+0.054 0	80	0 −0.054										
75	56C	126	55	15.88	+0.038 +0.013	4.78	18.1	114.3	165.1	149.4	10.5	31.75	+0.025 0	34.7	6.35	130	+0.063 0	95	0 −0.054	70	73.5	120	31.75	0 −0.013	34.5	6.35	267	202	1/2″–13
	140TC	126	59	22.23	+0.038 +0.013	4.78	24.6	114.3	165.1	149.4	10.5	31.75	+0.025 0	34.7	6.35	130	+0.063 0	95	0 −0.054										
	180TC	126	76	28.58	+0.050 +0.013	6.35	31.5	215.9	228.6	184.2	14	31.75	+0.025 0	34.7	6.35	130	+0.063 0	95	0 −0.054										
90	56C	143	55	15.88	+0.038 +0.013	4.78	18.1	114.3	165.1	149.4	10.5	34.93	+0.025 0	38.6	7.94	152	+0.063 0	110	0 −0.054	80	84	140	34.93	0 −0.013	38.3	7.94	309	234	1/2″–13
	140TC	143	59	22.23	+0.038 +0.013	4.78	24.6	114.3	165.1	149.4	10.5	34.93	+0.025 0	38.6	7.94	152	+0.063 0	110	0 −0.054										
	180TC	143	76	28.58	+0.050 +0.013	6.35	31.5	215.9	228.6	184.2	14	34.93	+0.025 0	38.6	7.94	152	+0.063 0	110	0 −0.054										
110	140TC	173	59	22.23	+0.038 +0.013	4.78	24.6	114.3	165.1	149.4	10.5	41.28	+0.025 0	45.7	9.53	170	+0.063 0	130	0 −0.063	90	94.5	155	41.28	0 −0.013	45.4	9.53	344	259	5/8″–11
	180TC	173	76	28.58	+0.050 +0.013	6.35	31.5	215.9	228.6	184.2	14	41.28	+0.025 0	45.7	9.53	170	+0.063 0	130	0 −0.063										
	210TC	173	89	34.93	+0.050 +0.013	7.95	38.6	215.9	228.6	184.2	14	41.28	+0.025 0	45.7	9.53	170	+0.063 0	130	0 −0.063										
130	140TC	193	59	22.23	+0.038 +0.013	4.78	24.6	114.3	165.1	149.4	10.5	44.45	+0.025 0	48.8	9.53	180	+0.063 0	180	0 −0.063	90	95	170	44.45	0 −0.013	48.7	9.53	360	275	5/8″–11
	180TC	193	76	28.58	+0.050 +0.013	6.35	31.5	215.9	228.6	184.2	14	44.45	+0.025 0	48.8	9.53	180	+0.063 0	180	0 −0.063										
	210TC	193	89	34.93	+0.050 +0.013	7.95	38.6	215.9	228.6	184.2	14	44.45	+0.025 0	48.8	9.53	180	+0.063 0	180	0 −0.063										
150	180TC	215	76	28.58	+0.050 +0.013	6.35	31.5	215.9	229	184.2	14	50.8	+0.025 0	56.4	12.7	180	+0.063 0	180	0 −0.063	100	105	200	50.8	0 −0.019	56.3	12.7	410	315	3/4″–10
	210TC	215	89	34.93		7.95	38.6	215.9	229	184.2	14																		

输出法兰安装尺寸
Output Flange Mounting Dimensions

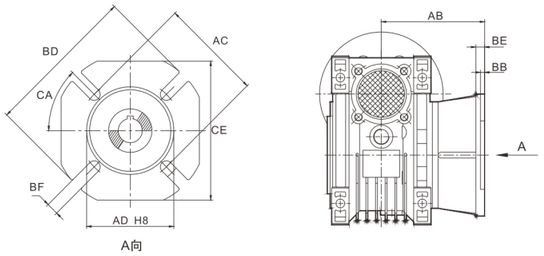

	25	30	40	50	63	75	90	110	130	150
AB	45	54.5	67	90	82	111	111	131	140	155
AC	55	68	80	85	150	165	175	230	255	255
AD	40	50	60	70	115	130	152	170	180	180
BB	3	4	4	5	6	6	6	6	6	7
BD	75	80	110	125	180	200	210	280	320	320
BE	6	6	7	9	10	13	13	15	15	15
BF	6.5(n.4)	6.5(n.4)	9(n.4)	11(n.4)	11(n.4)	14(n.4)	14(n.4)	ϕ 14(n.8)	ϕ 16(n.8)	ϕ 16(n.8)
CA	45°	45°	45°	45°	45°	45°	45°	45°	22.5°	22.5°
CE	70	70	95	110	142	170	200	260	290	290

注：BF尺寸110～150为ϕ圆孔。
Note: BF size 110-150 is ϕ round hole

JRST(B)安装尺寸
JRST(B) Mounting Dimensions

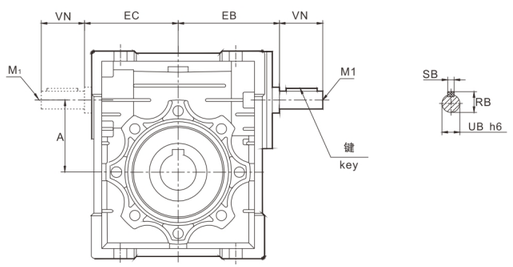

	30	40	50	63	75	90	110	130	150
A	30	40	50	63	75	90	110	130	150
EB	50	61	74	90	105	125	142	162	195
EC	45	53	64	75	90	108	135	155	175
M1	-	-	M6	M6	M8	M8	M10	M10	M12
RB	10.2	12.5	16	21.5	27	27	31	33	38
SB	3	4	5	6	8	8	8	8	10
UB	9	11	14	19	24	24	28	30	35
VN	20	23	30	40	50	50	60	80	80
输入轴平键 Key of the input shaft									
规格 Size	3×3	4×4	5×5	6×6	8×7	8×7	8×7	8×7	10×8
长度 Length	15	20	25	35	45	45	55	70	70

6.2 双级蜗杆减速机
Double Step Worm Gear Box

JRSTE(D)安装尺寸
JRSTE(D) Mounting Dimensions

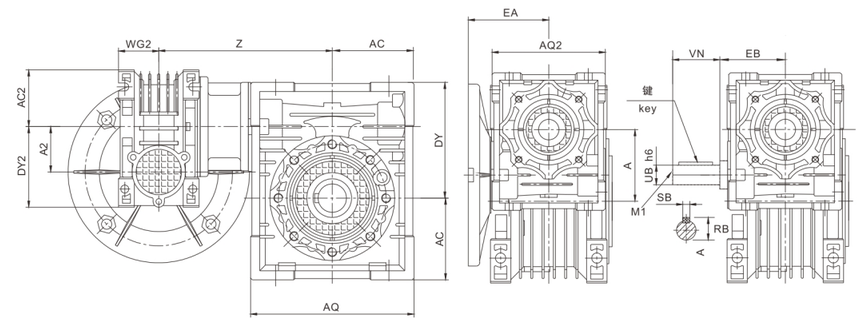

	25/30	25/40	30/40	30/50	30/63	40/75	40/90	50/110	63/130	63/150
A	30	40	40	50	63	75	90	110	130	150
A2	25	25	30	30	30	40	40	50	63	63
AC	40	50	50	60	72	86	103	127.5	147.5	170
AC2	35	35	40	40	40	50	50	60	72	72
AQ	80	100	100	120	144	172	206	252.5	292.5	340
AQ2	70	70	80	80	80	100	100	120	144	144
DY	57	71.5	71.5	84	102	119	135	167.5	187.5	230
DY2	48	48	57	57	57	71	71	84	102	102
EA	45	45	55	55	55	71	71	80	95	95
EB	-	-	50	50	50	61	61	74	90	90
M1	-	-	-	-	-	-	-	M6	M6	M6
RB	-	-	10.2	10.2	10.2	12.5	12.5	16	21.5	21.5
SB	-	-	3	3	3	4	4	5	6	6
UB	-	-	9	9	9	11	11	14	19	19
VN	-	-	20	20	20	23	23	30	40	40
WG2	22.5	22.5	29	29	29	36.5	36.5	43.5	53	53
Z	100	115	122	132	145	167.5	184.5	226	245	275
输入轴平键 Key of the input shaft										
规格 Size	-	-	3×3	3×3	3×3	4×4	4×4	5×5	6×6	6×6
长度 Length	-	-	15	15	15	20	20	25	35	35

6.3 附件
Accessories

单(A)/双出轴(B)
Single & Double Output Shaft

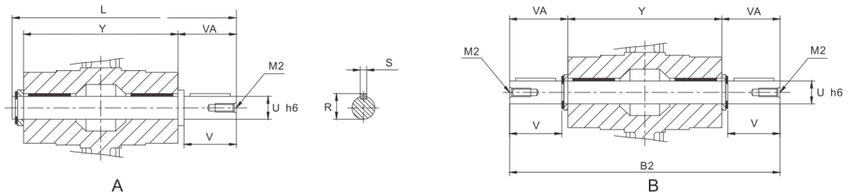

	25	30	40	50	63	75	90	110	130	150
B2	101	128	164	199	219	247	309	324	340	374
L	81	102	128	153	173	192	234	249	265	297
M2	-	M6	M6	M10	M10	M10	M12	M16	M16	M16
R	12.5	16	20.5	28	28	31	38	45	48.5	53.5
S	4	5	6	8	8	8	10	12	14	14
U	11	14	18	25	25	28	35	42	45	50
V	23	30	40	50	50	60	80	80	80	82
VA	25.5	32.5	43	53.5	53.5	63.5	84.5	84.5	85	87
Y	50	63	78	92	112	120	140	155	170	200

基座(C)
Base plate

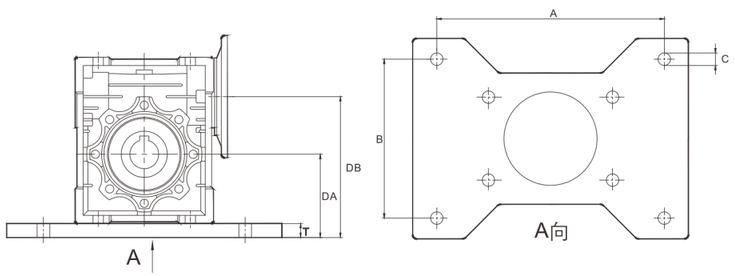

	30	40-A	40-B	50	63-A	63-B	75	90
A	111	111	146	162	179	203	214	241
B	84	84	114	119	124	133	149	156
C	8.5	8.5	10.5	12.5	12.5	12.5	12.5	12.5
DA	57	67	70	76	89	93	101.5	117.5
DB	87	107	110	126	152	156	176.5	207.5
T	17	17	20	16	17	21	15.5	14.5

防护罩(D)
Protective Cover

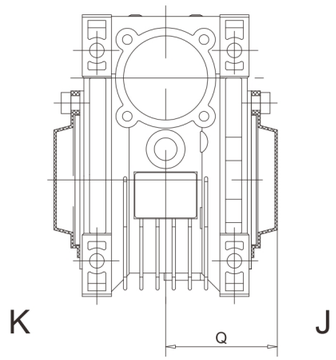

	30	40	50	63	75	90	110	130	150
Q	42	50	58	69	74	86	94	102	117

扭矩臂(E)
Torque Arm

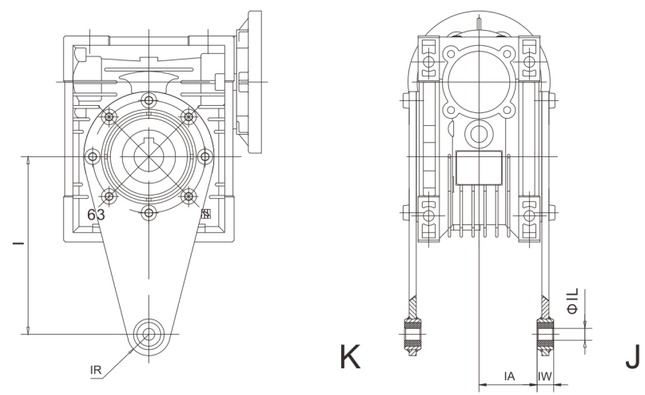

	25	30	40	50	63	75	90	110	130	150
I	70	85	100	100	150	200	200	250	250	250
IA	17.5	24	31.5	38.5	49	47.5	57.5	62	69	84
IL	8	8	10	10	10	20	20	25	25	25
IR	15	15	18	18	18	30	30	35	35	35
IW	14	14	14	14	14	25	25	30	30	30

7. 使用说明
Operating Instructions

7.1 单级蜗杆减速机
Single Step Worm Gear Box

7.1.1 减速机型号25～90采用优质铝合金压铸箱体，外形轻巧美观，结构紧凑，体积小， 重量轻，节省安装空间，不易锈蚀。
The gearbox which model is 25~90 made of aluminum alloy die-casting box,good looking in appearance, compact in structure, rust proofing on surface and small volume to save mounting space.

7.1.2 减速机型号110～150采用灰铸铁铝模铸造，外形美观坚固，可多方位安装使用。
The gearbox model of 110~150 is made of cast iron which casted with aluminum mould.It's good looking and solid,and can be used through the setting of multi-azimuth.

7.1.3 散热性能好，安全可靠，效率高。
Good radiating characteristic leads safe and reliability and high efficiency for using.

7.1.4 承载能力高，传动平稳，振动小，噪音低。
The strong capacity of loading ensure stable transmission,make less vibration and noise.

7.1.5 具有动力输入及扭矩输出的多种联接结构，满足多种联接需要；箱体外形设计及底脚孔设置布局适应多种安装方式，通用性强。
Varies of connecting structure for power input and torque output meet different requirements;the design of box outline and the set of foot hole with good versality is apt to many kinds of mounting.

7.2 双级蜗杆减速机
Double Step Worm Gear Box

7.2.1 由单级蜗杆减速机组合而成，具有单级蜗杆减速机的一切优点并获得大的传动比。
It is combined by two single step gearbox and has all the virtues of them. And you can get bigger transmission ratio with it.

7.2.2 常用双级组合机型为：25/30、25/40、30/40、30/50、30/63、40/75、40/90、50/110、63/130、63/150，用户若有特殊要求时，可根据实际需要选择 25、30、40、50、63、75、90、110、130、150作为组合单元另行组合。
The models of 25/30,25/40,30/40,30/50,30/63,40/75,40/90,50/110,63/130,63/150 are in common use.You can choose 25,30,40,50,63,75,90,110,130,150 ascombination units to combine according to the fact of your special needs.

7.3 安装注意事项
Notes of Installation

7.3.1 减速机须安装在平整坚固的底座上，底脚螺栓必须紧固、防震。
The base-plate must be plane and stoutness,and the base-bolts must be screwed down and shockproof.

7.3.2 原动机—减速机—工作机的各联接轴伸，安装后必须互相准确对准轴线。
The connecting shafts of prime mover, gearbox and operation device must be coaxial after installation.

7.3.3 减速机输入端及输出端轴伸外径尺寸公差按h6制作，与之相匹配的联轴器、皮带轮、链轮等传动件内孔需按合适的公差尺寸配置，避免装配过紧损坏轴承，装配过松影响正常的动力传递。
The diameter tolerance zone of input and output shaft is h6,the holes of fittings (such as couplings, belt-pulley,sprocket wheel and so on) must properly mate the shaft ,which prevents bearing from breakage because of over-tight mate or avoid effecting normal power transmission because of over-loose mate.

7.3.4 链轮、齿轮等传动件装上轴伸时，应尽量靠近轴承，以减少轴伸弯曲应力。
Drives such as sprocket wheel and gear must be fitted close to bearing in order to reduce bending stress of hanging shaft.

7.3.5 减速机装配电机时，应在蜗杆头部内孔孔壁及键槽处涂抹黄油，避免装配过紧，防止轴孔日久生锈。
While assembling motor to the gearbox, it is necessary to add butters to the worm shaft input hole and keyway, so as to avoid tightly assembling and rusting when it is used for a long time.

7.3.6 使用各类电机直联型减速机时，若电机重量偏大，应设支撑装置。
Supporting unit is required when gearbox directly match with motors whose weight is bigger than normal.

7.4 使用注意事项
Operating Notes

7.4.1 使用前应注意检查减速机型式结构、中心距规格、传动比、输入轴联接方式、输出轴结构、输入轴输出轴轴指向和回转方向等是否符合使用要求，蜗杆输入转速最高不宜超过2000r/min，一般使用范围为600~1800r/min。
Before using, please check carefully whether the reducer mode, centre distance size, transmission ratio,input connecting method, output shaft structure, input and output shaft direction and revolving direction are right according to requirement.It is better that the input speed of worm shaft shouldn't exceed 2000RPM, the general range is 600~1800r/min.

7.4.2 开机时应逐步施加载荷，不能满载起动。
The load should be added step by step when using the machine.Never running it with full load.

7.4.3 型号25~90减速机仅设加油孔，出厂时减速机内已加好ISO VG320合成润滑油，用户无需加油,机器连续运转约10000小时后，应该更换新润滑油。
The gearbox which model is among 25~90 has the oil add hole only. It has been full of synthetic lubrication oil ISO VG320 .User doesn't need to think about oil adding, after about 10000 hours conti-nual running, please change new lubrication oil.

7.4.4 型号110~150减速机设有加油孔、放油孔和油标，减速机内已加ISO VG460矿物润滑油，用户在使用前须拉掉通气器上的橡胶环。首次运行500小时后更换新油，以后每隔约5000小时换油一次。
The gearbox model of 110~150 has oil add hole, oil out hole and oil gauge. Mineral lubrication oil ISO VG460 has been filled in enough, before using, user must pull out the rubber ring of vent plug. After the first 500 hours running, clean the interior box and change new oil in it. Then change the oil once per 5000 hours.

7.4.5 减速机允许最高油温为95℃，超过时应停机检查。
The permitted temperature of the oil in reducer is 95℃.If it exceeds this value, it must be stopped and checked.

7.4.6 若减速机使用环境温度超过或低于表中规定使用环境温度5℃以上，请咨询杰牌。
When the ambient temperature in 5℃ upper or lower than the normal level stated in the table,please consult JIE for details.

8. 油品润滑
lubricant

8.1 润滑油选用表
Lubricatioin oil chosen table

减速机规格 Reducer size	25~90	110~150	
润滑油类型 Type of lubrication oil	合成润滑油 Synthetic lubrication oil	矿物润滑油 Mineral lubrication oil	
环境温度℃ Ambient temperature	-25~+50	-5~+40	-15~+25
ISO VG	ISO VG 320	ISO VG 460	ISO VG 220
AGIP	TELIUM VSF320	BLASIA 460	BLASIA 220
SHELL	TIVELA S320	TIVELA S460	TIVELA S220
ESSO	GLYGOYLE 220	SPARTAN EP460	SPARTAN EP220
MOBIL	GLYGOYLE 320	MOBIL GEAR 600×P460	MOBIL GEAR 600×P220
CASTROL	ALPHASYN PG320	ALPHA MAX 460	ALPHA MAX 220
BP	ENERGOL SG-XP320	ENERGOL GR-XP460	ENERGOL GR-XP220

8.2 润滑油注油量(L)
Adding Capacity of lubrication oil

规格 Type / 安装型式 Installation	25	30	40	50	63	75	90	110	130	150
B3	0.02	0.04	0.08	0.15	0.3	0.55	1	3	4.5	7
B6 B7								2.5	3.5	5.4
B8								2.2	3.3	5.1
V5								3	4.5	7
V6								2.2	3.3	5.1

9. 故障分析
Malfunctions Analysis

故障情况 Fault Description	故障原因 Reasons	解决办法 Solutions
过 热 Overheating	原动机、减速机、工作机连接不当 Improper connection among prime mover, reducer and the operation device	调整至适当位置，使三者相联轴线同轴 Adjust to proper position
	超负荷运转 Overloading	适当调整负荷 Adjust to proper load
	油封过度磨擦 Over friction of oil seals	在油封唇口处滴润滑油 Drop lubricant at oil seal
	☆润滑油过少或过多 Lubricant oil overmuch or shortage	按油标指示点调整油量 Adjust to proper oil quantity as indication
	☆润滑油杂质多或润滑性差 Much impurity in oil or inferior oil	按润滑油选用表更换合适新油 Refill proper oil
振 动 Vibration	原动机、减速机、工作机固定不良 Prime mover, reducer and the operation device mount badly	查出固定不良部位，正确固紧 Find out the bad place,tighten it
	蜗轮副齿部磨耗或损伤 Tooth surface of worm gear sets worn-out or damaged	更换蜗轮副（需要时请咨询杰牌） Replace worm gear sets(we will cooperate with you when necessary)
	轴承磨损 Bearing worn-out	更换轴承 Replace Bearing
	螺栓松脱 Bolt loose	固紧螺栓 Tighten Screw
异 响 Noise	原动机与减速机连接不当 Improper connection among prime mover, reducer and the operation device	原动机重新调整连接 Adjust to proper position
	轴承损伤或间隙过大 Bearing damaged or too large clearance	更换轴承 Replace Bearing
	蜗轮副啮合不良 Worm gear sets mesh badly	修整齿面或更换蜗轮副（需要时请咨询杰牌） Mend tooth surface or replace worm gear sets (please contact to us)
	☆润滑油不足 Lubricant oil shortage	按油标指示点补加润滑油 Fill in adequate oil as indication
漏 油 Oil leakage	油封唇口磨损 Oil seal lip worn-out	更换油封 Replace oil seal
	油封档轴颈磨损 Shaft of oil seal area worn-out	更换输出轴或输入轴 Replace input or output shaft
	放油螺塞未旋紧 Oil screw plug loose	螺纹处加密封胶、旋紧螺塞 Tighten oil screw plug
	油标破损 Oil gauge damaged	更换油标 Replace oil gauge
蜗轮副齿面磨损过快 Tooth surface of worm gear sets abrade extra-quickly	超负荷运转 Overload	调整至适当负荷 Adjust to proper loading
	☆润滑油不符合要求 Lubricant oil not according with requirement	更换合适的润滑油 Replace proper lubricant oil
	☆润滑油不足 Lubricant oil shortage	按油标指示点加足润滑油 Fill adequate oil as indication
	未按规定适时换油，润滑油劣化 Not replacing lubricant oil in time according to requirement, oil deteriorates	按规定要求适时换油 Replacing oil in time according to requirement
	运转温度过高 Overheating while running	1. 按“过热”故障处理 2. 采取合适措施，降低环境温度 1. Deal with it as "Overheating" 2. Adopting proper measures to make environment temperature fall

注：1.☆为换油后出现的故障原因。
2.如果发生其他故障无法解决时，请咨询杰牌。
Annotate:1.☆Accored after the lubricant changed.
2.If other faults not listed above occur,please contact with us at any moment, our company will supply thorough consultation and service.

五. WP 蜗杆减速机
WP Worm Gearbox

分 目 录

SUB-CONTENTS

1. 产品结构
Products Structure

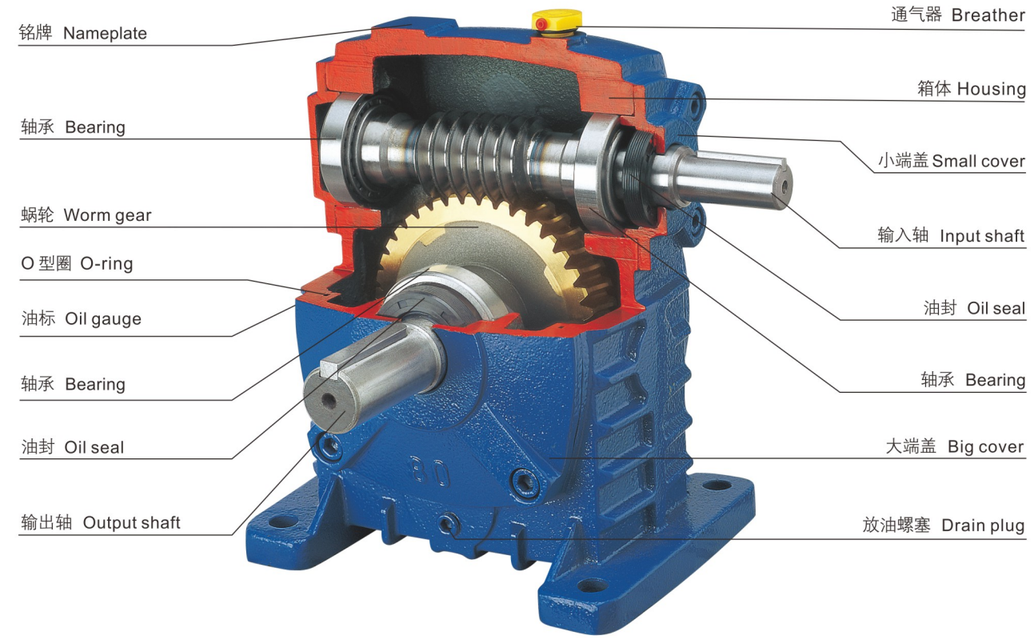

2. 型号说明
Model Description

W	P	W	E	D	K	A	50/80	-	600	-	B
1	2	3	4	5	6	7	8		9		10

1
企业代码
W–万杰公司
Enterprise code
W–JIE Drive

2
箱体结构
P – 整体
Housing structure
P-whole

3
箱体型式
W – 万能型
无代码 – 基本型
Housing model
W-universal
Non-code-basic

4
整机结构
E – 双级
EE – 多级
无代码 – 基本型
Unit structure
E-double
EE-multistage
Non-code-basic

5
输入轴联接方式
D – 带电机法兰
无代码 – 基本型
Connector of input shaft
D-with motor flange
Non-code-basic

6
输出轴结构
K – 中空输出轴
无代码 – 基本型
Structure of output shaft
K-hollow
Non-code-basic

7
输出、输入轴置式
A– 入轴在下 **S**– 入轴在上
O– 出轴向上 **X**– 出轴向下
T– 入轴向上 **V**– 入轴向下
无代码 – 万能型
Arrangement of input or output shaft
A-input shaft is below
S-input shaft is above
O-output shaft is upward
X-output shaft is downward
T-input shaft is upward
V-input shaft is downward
Non-code-universal

8
规 格
以中心距表示
50/80
Size signed by center distance
50/80

9
传 动 比
600
Transmission ratio
600

10
轴 指 向
按产品样本轴指向图选定
B
Selecting it according to shaft direction figure in this manual
B

3. 产品说明
Product Description

杰牌WP蜗杆减速机，拥有自主知识产权，产品采用铸铁箱体，具有坚固耐用、运转平稳、低噪音、不漏油和快交付等亮点，包括WP蜗杆减速机、WPW多置式蜗杆减速机等全系列产品。

杰牌WP蜗杆减速机，通过完整产品策划与设计和全价值链精益生产最优方案实施，推进精益生产、建设智能工厂，实现研产供销服一体化，以满足客户对快速响应的需求。

杰牌WP蜗杆减速机，遵循模块化和最优化设计理念，产品包括蜗杆减速机，实心轴输入接口、IEC电机输入接口，实心轴输出模块、空心轴输出模块，底脚安装、法兰安装等输入接口、输出模块和安装型式，同时支持多级减速机和不同型号规格减速机的模块化组合与集成，产品颜色为军黄色(锤纹漆)或豆绿色(锤纹漆)，并按单包装，可根据客户需要进行个性化的设计与制造。

杰牌为全球好客户做好产品，杰牌智能传动方案提供商！

WP worm gearbox with independent intellectual property rights. The product uses the cast iron housing, which is durable and features smooth running, low noise, no oil leakage and short lead time. It includes WP worm gearbox and WPW multi-position worm gearbox.

WP worm gearbox promotes lean production, builds intelligent factories, and realizes the integration of research, production, supply, marketing and service, so as to meet customers' demand for rapid response through complete product planning and design such as “core product-extreme technology, peripheral product-extreme service, external product-extreme experience” and the implementation of the optimal plan of lean production in the whole value chain such as “product planning, design validation, processing test, assembly test, warehouse logistics, sales service, information system, HR, operation plan, strategy planning”.

WP worm gearbox follows the concept of modular and optimized design. It includes worm gearbox, solid shaft input interface, IEC electric motor input interface, solid shaft output module, hollow shaft output module, foot mounting, mounting without foot and flange mounting. This product supports the modular combination and integration of multi-stage gearbox with different types adapters, with standard painting color yellow or bean green & packed based on order. And available for customized base on customer requirement.

JIE is committed to providing great products for great partners across the world, JIE Intelligent Drive Solutions Provider.

4. 选型说明
Selection Description

4.1 杰牌传动WP产品选型表

使用工况：

应用行业：　　设备名称：
环境温度：　　环境湿度：
海拔高度：　　使用场地：□室内 □室外
起停频率：　　运行时间：
负载时间：□15% □25% □40% □60% □100%
现用品牌：　　现用型号：
存在问题：　　需改进项：

产品信息：

包装附件类：
包装材质：□纸箱 □木箱 □纸箱+木箱　　箱贴唛头：□中文 □英文
相关资料：□合格证 □出厂检验报告 □中文说明书 □英文说明书
附件清单：□基座
外观标识类：
油漆颜色：□JMR-01 □JMG-01 □JGB-01 □RAL2002 □RAL5015 □RAL9003 □RAL7045 □RAL7031
防腐等级：□标准 □JS1 □JS2 □JS3 □JS4
铭牌要求：□中文 □英文
安装尺寸类：
产品类型：____（在附图中勾选）
出轴方向：□A □B □C □D □E □F □G （见附图）
出轴旋向：□顺时针 □逆时针 □双向
性能指标类：
传动比：i=_____　　输出扭矩（Nm）：_____　　使用系数：_____
_____
电机类型：□标准电机 □变频电机 □防爆电机 □辊道电机 □起重电机 □伺服电机
电机极数：□2 □4 □6 □8　　电机功率：____ kW
额定电压：□220/380V □380/660V　　电机基频：□50Hz □60Hz □87Hz
绝缘等级：□F □H　　防护等级：□IP54 □IP55
工作制： □S1 □S3-40%　　冷却方式：□IC410 □IC411 □IC416
能效能级：□3级（IE3） □2级（IE4）　　旋转方向：□顺时针 □逆时针
制动电压：□DC 24V □AC 220V □AC 380V
制动器响应：□普通 □快速　　释放装置：□手柄释放HR □螺钉释放HF □无
风机电压：□DC 24V □AC 220V（1～）□AC 380V（1～） □AC 220/380V（3～）
风机频率：□50Hz □60Hz
释放装置与接线盒角度（从轴伸端看顺时针）：□0°□90°□180°□270°（见附图）
产品型号：

定制信息：
包装附件类：
外观标识类：
安装尺寸类：
性能指标类：
售后服务类：

服务信息：
售前服务：
培训咨询：☐选型培训 ☐应用培训 ☐使用维护
设计选型：☐参与设计 ☐设计校核 ☐产品选型
需求确认：☐工况确认 ☐产品确认 ☐服务确认
售中服务：☐驻厂全检 ☐过程抽检 ☐出厂检验
售后服务：☐安装调试 ☐检测维护 ☐备品备件

商务信息：
运输方式：
交付地点：
交付时间：
订单数量：
结算价格：

附图：
安装方式：

WPA、S、DA、DS、W、WA、WS、WK、WKA、WKS、WDK、WDKA、WDKS

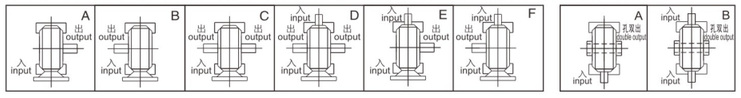

WPX、O、DX、DO、WX、WO、WDX、WDO、WKO、WDKO

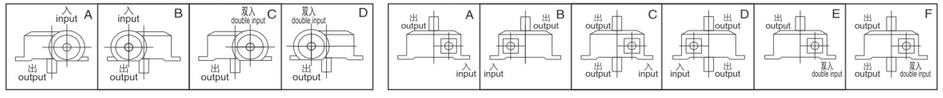

WPWT、WV、WDT、WDV、WKT、WKV、WDKT、WDKV

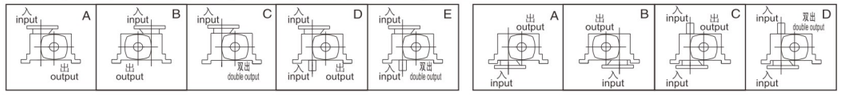

WPWE、EA、ES、WE、EDA、EDS、WEK、EKA、EKS、WEDK、WEDKA、WEDKS

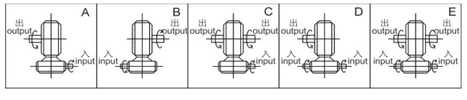

WPEX、EO、EDX、EDO、WEKO、WEDKO

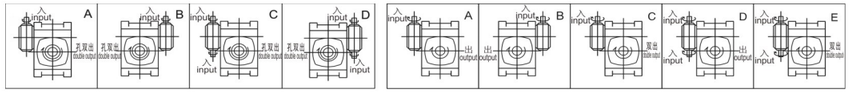

Selection Table of JIE WP Products

Conditions of use:
Application industry: Equipment name:
Ambient temperature: Ambient humidity:
Altitude: Site of use: ☐indoor ☐outdoor
Start-stop frequency: Running time:
Load time: ☐15% ☐25% ☐40% ☐60% ☐100%
Current brand: Current model:
Existing problem: Items needing improvement:

Product information:
Packing accessories:
Packaging material: ☐Carton ☐Wooden case ☐Carton + Wooden case Case mark: ☐Chinese ☐English
Relevant data: ☐Certificate of conformity ☐Ex-factory inspection report ☐Chinese operating instruction ☐English operating instruction
List of accessories: ☐Base
Appearance identification:
Paint color: ☐JMR-01 ☐JMG-01 ☐JGB-01 ☐RAL2002 ☐RAL5015 ☐RAL9003 ☐RAL7045 ☐RAL7031
Nameplate requirement: ☐Chinese ☐English
Anti-corrosive grade: ☐Standard ☐JS1 ☐JS2 ☐JS3 ☐JS4
Installation dimension:
Product model: ____(Check in the attached figure)
Output shaft direction: ☐A ☐B ☐C ☐D ☐E ☐F ☐G
Output shaft rotation: ☐Clockwise ☐Counterclockwise ☐Two-direction
Performance indicators:
Transmission ratio: i=_____ Output torque（Nm）: _____ Service factor: _____
Type of motor: ☐Standard motor ☐Frequency conversion motor ☐Explosion-proof motor ☐Roller motor ☐Lifting motor ☐Servo motor
Rated power: ____kW Pole number: ☐2 ☐4 ☐6 ☐8
Rated voltage: ☐220/380V ☐380/660V Motor frequency: ☐50Hz ☐60Hz ☐87Hz
Insulation grade: ☐F ☐H Protection grade: ☐IP55 ☐IP56
Working system: ☐S1 ☐S3-40% Cooling mode: ☐IC410 ☐IC411 ☐IC416
Energy efficiency class: ☐IE3 ☐IE4 Direction of rotation: ☐Clockwise ☐Counterclockwise
Braking voltage: ☐DC 24V ☐AC 220V ☐AC 380V
Brake response: ☐ Ordinary ☐ Fast Release device: ☐ Handle release HR ☐ Screw release HF ☐ None
Fan voltage: ☐DC 24V ☐AC 220V（1～） ☐AC 220V（1～） ☐AC 380V（3～）
Fan frequency: ☐50Hz ☐60Hz
Angle between release device and terminal box (clockwise from the end of shaft extension) :
☐0° ☐90° ☐180° ☐270° (see attached figure)
Product model:

Customized information:

Packaging:

Appearance:

Installation dimension:

Performance indicators:

After-sales service:

Service information:

Pre-sales service:

Training consulting: ☐ Type selection training ☐ Application training ☐ Use and maintenance

Design selection: ☐ Participate in design ☐ Design verification ☐ Product selection

Demand confirmation: ☐ Working condition confirmation ☐ Product confirmation ☐ Service confirmation

In-sales service: ☐ On-site full inspection ☐ Process sampling ☐ Ex-factory inspection

After-sales service: ☐ Installation and commissioning ☐ Testing and maintenance ☐ Spare parts

Business information:

Transportation:

Delivery place:

Delivery time:

Order quantity:

Settlement price:

Attached figure:

WPA、S、DA、DS、W、WA、WS、WK、WKA、WKS、WDK、WDKA、WDKS

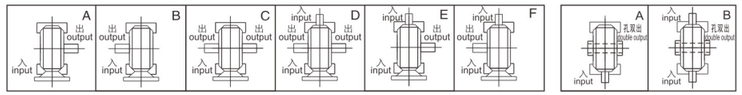

WPX、O、DX、DO、WX、WO、WDX、WDO、WKO、WDKO

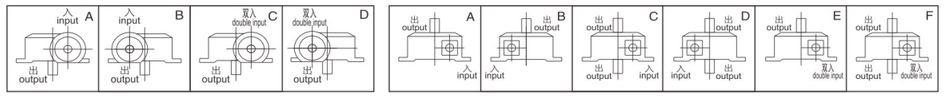

WPWT、WV、WDT、WDV、WKT、WKV、WDKT、WDKV

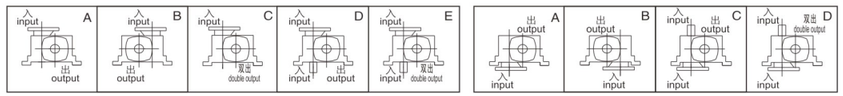

WPWE、EA、ES、WE、EDA、EDS、WEK、EKA、EKS、WEDK、WEDKA、WEDKS

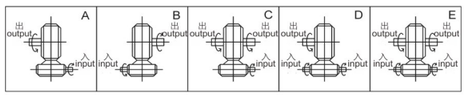

WPEX、EO、EDX、EDO、WEKO、WEDKO

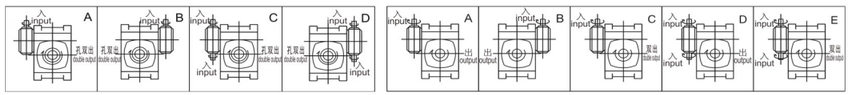

4.2 选型要素
Selection points

4.2.1 输入功率、输出扭矩
Input power & output torque

输入功率和输出扭矩的转换公式如下：
The formula of transforming input power to output torque is listed as follows:

输入功率 P(kW)= 输出扭矩 T(Nm)×输出转速 N_2(r/min)/(9549×效率 η)
input power P(kW)= output torqueT(Nm) × output revolving speed N_2(r/min)/(9549 × efficiency η)

减速机输入功率为减速机的输入动力容量，输出扭矩为减速机许用承载能力，均在产品的各“功率、扭矩”表中列出，可供选型时参照选用。
Input power denotes the dynamical capacity of a reducer, and output torque denotes the maximum load a reducer allows, which are both listed in power and torque tables in order to serving selection.

4.2.2 输入转速、输出转速
Revolving speed of input shaft and output shaft

输入和输出转速公式如下：
The formula of transforming input revolving speed to output is listed as follows:

输出转速 N_2(r/min)= 输入转速 N_1(r/min)/ 传动比 i
Output revolving speed N_2(r/min)= input revolving speed N_1(r/min)/transmission ratio i

当减速机以皮带轮、链轮及联轴器传动时，输入转速不宜超过2000(r/min)，一般转速范围600~1800(r/min)，转速过高易使轴承加重磨擦而缩短寿命。
With belt–pulley, couplings or sprocket wheel shaft transmission, the input speed should not exceed 2000(r/min); the general range is 600~1800RPM. If the revolving speed is too high, the bearing will have less life due to over–friction.

注：名义传动比与实际传动比可能有差异，具体参照“实际传动比表（68）”。
Note: The actual transmission ratio may be different from transmission ratio, please see page 68"Actual transmission ratio".

4.2.3 效率
Efficiencies

效率计算公式如下：
The efficiency calculation formula is listed as follows:

效率 η =(输出功率 / 输入功率)×100%
Efficiency η =output power ×100%/input power

由于减速机运转时内部存在磨擦及振动、部分输入能量将转化为热能等非工作消耗，效率就是减速机输入能量的利用率，效率的高低取决于蜗杆头数、蜗杆转速、润滑油粘度、轴承磨擦阻力及蜗杆副材质的磨擦系数等。每种规格、传动比的减速机，其效率数值各不相同，下表列出效率的一般范围数值，可供选型时参考：

Due to the internal vibration and wear, partial input energy will be transformed to be heat energy and fade away, efficiency is the utilization ratios of input energy. The efficiency depends on worm's tooth number, revolving speed, lubricant oil viscidity,bearing friction and worm gear's material friction factor.Reducers with various model or transmission ratio have various efficiency.The following table lists the range of the efficiency value.

传动比 Ratio	1/10	1/15	1/20	1/25	1/30	1/40	1/50	1/60
效率 Efficiency	77~90%	76~88%	75~84%	72~82%	68~82%	64~75%	62~72%	60~71%

4.2.4 输入轴、输出轴回转方向
Revolving direction of input and output shaft

蜗杆减速机输出轴回转方向取决于蜗杆螺牙方向，基本型蜗杆减速机均为右旋螺牙，以杰牌的产品样本上WPA 照片为依据，面对输入轴、输出轴观看，当输入轴顺时针方向旋转时，输出轴旋转方向为逆时针；以 WPS 照片为依据，面对输入轴、输出轴观看，当输入轴顺时针方向旋转时，输出轴旋转方向为顺时针；或参照图例4.1。其余各种输出轴装配结构可按以上方法判定转向。当按特殊需要蜗杆螺牙方向制成左旋时,情况正好相反。

The revolving direction of output shaft relies on worm thread's direction; right–directed thread is for basic use. According to the photograph of WPA in our product manual, facing input shaft and output shaft, when input shaft is in clockwise, output shaft is in counter–clockwise;and according to the photograph of WPS, facing input shaft and output shaft, when input shaft is in clockwise, output shaft is in clockwise too; for other output shaft assembly structure,the method of ensuring revolving direction is as above or the cutline 4.1.It will be adverse when the worm shaft is left–directed.

图例4.1(Cutline 4.1)

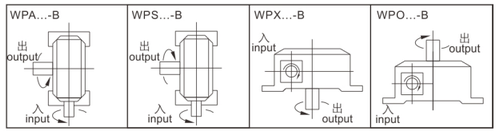

4.2.5 工况系数
Service Factor

减速机在设计时，其输入动力容量及许用承载能力的强度计算按照每天连续运转八小时、载荷稳定不变的理想工况设定，在实际使用时，现场工况（如：是否有反复启动停止或频繁正反转，使用时间是否少于或多于八小时，冲击载荷 大小及特性）可能与理想工况相差甚远，在选型时应予充分考虑，在选用减速机输入功率或输出扭矩时，可按下列公式加以修正：

When gearbox is designed, the input load capacity and allowed intensity are calculated a continual operation of 8 hours a day and the ideal conditions of a uniform load design. However, the on–site use (e.g. repetitive start–up, stop or obverse and reverse rotation, use time more or less than 8 hours a day,different value and characteristics of impact load from standard conditions and so on)may be different from ideal use which should be taken into account. While selecting reducer input power or output torque, revise them according to the following formula:

修正输出扭矩T_2 (Nm) = 理论输出扭矩T_1 (Nm) × 工况系数K

Revised output torque T_2 (N·m)=theoretic output torque T_1 (N·m) × running condition factor K

工况系数 K 值表

Table of Service factor K

原动机 Prime mover	载荷状况 Load	每日运转时间（小时）Operation time per day(hour)			
		0.5~2	2~6	6~10	10~24
电动机 Electromotor	平稳载荷 Uniform	0.80	0.90	1.00	1.25
	中等冲击 Medium shock	0.90	1.00	1.25	1.50
	较大冲击 Heavy shock	1.00	1.25	1.50	1.75

注: 当正反转或停开次数1 小时内达 10 次以上时，上表 K 值还应乘以1.2

Annotate: when the times of start-up, stop or obverse per hour is more than 10, the value K must multiply 1.2.

4.2.6 产品标准颜色
Standard Color Of Products

减速机常规颜色为RAL7031

Colour of normal reducer is RAL7031

4.3 选型实例
Selection example

基本情况

The basic condition

传 动 结 构 Transmission structure	相 关 数 据 relative data
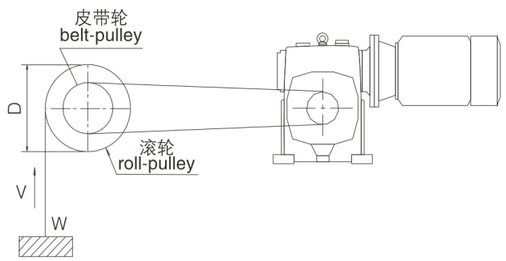	● 起吊物体重量 W=600kg weight of suspended object W=600kg
	● 起吊物体速度 V=12m/min speed of suspended object V=12m/min
	● 滚轮直径 D=0.4m roll-pulley diameter D=0.4m
	● 皮带轮传动效率 η_1=0.92 efficiency of belt-pulley η_1=0.92
	● 减速机传动效率 η_2=0.71 efficiency of reducer η_2=0.71
	● 运转时间 8小时 / 日 running time 8 hours per day
	● 启动次数 2 次 / 小时，较大冲击 2 times per hour heavy shock
	● 使用电源 三相 380V,50Hz electrical source three-phase 380V, 50Hz

选型流程
Selection steps

序号 Number	内 容 Contents	计 算 公 式 Formula	计算示例 Example
1	定传动比 Calculate ratio	根据输入轴及输出轴的转速确定传动比 1.计算皮带轮转速 N_3 N_3=起吊速度V/(滚轮直径D × π) 2.计算总传动比 i i= 输入轴转速 N_1/ 皮带轮转速 N_3 3.计算减速机传动比 i_1 i_1= 总传动比 i/ 皮带轮传动比 i_2 Calculate the transmission ratio according to input and output shaft revolving speed 1. Get belt-pulley revolving speed N_3 N_3=speed of suspended object V/(roll-pulley diameter D × π) 2.Calculate general transmission ratio i i=Input revolving speed N_1/belt-pulley revolvling speed N_3 3.Calculate reducer transmission ratio i_1 i_1=general ratio i/belt-pulley transmission ratio i_2	1.N_3 =12/(0.4 × 3.142) =9.6 r/min 2. i=1440/ 9.6 =150 3.设定 i_2=5，则 i_1=150/5 =30
2	计算输出扭矩 Calculate output torque	计算减速机输出扭矩T T= 物体重量 W × 10 × 滚轮半径(D/2)/(皮带轮传动比 i_2× 皮带轮传动效率 η_1) Calculate reducer output torque T T=weight of suspended object W × 10 × roll-pulley radius (D/2) /(belt-pulley ratio i_2× belt-pulley transmission efficiency η_1)	T=600 × 10 × (0.4/2)/(5 × 0.92) =260.9 Nm
3	修正输出扭矩 Revise output torque	根据使用条件，8 小时运转、较大冲击，工况系数 K=1.5 计算修正输出扭矩 T_1 T_1 = 输出扭矩 T × K According to using condition: operation 8 hours a day, heavy shock, running condition factor K=1.5 calculate revised torque T_1 T_1=output torque T × K	T_1=260.9 × 1.5 =391 Nm
4	计算输入功率 Calculate input power	换算功率 P P=修正输出扭矩 T_1 × 输出轴转速N_2 /(9549 × 减速机传动效率 η_2) Calculate input shaft power P P= revised output torque T_1 × output revolving speed N_2/ (9549 × reducer transmission efficiency η_2)	P=391 × (1440/30)/(9549 × 0.71) =2.77kW
5	选型号规格 Select model	根据产品样本，选定型号120，传动比 1/30.输入轴功率3 kW.输出轴扭矩 413Nm According to product manual, the selection is, Model 120, ratio 1/30, rating input power 3kW, output torque 413Nm	

5. 技术参数
Technical Specifications

WP. WPK. WPW. WPWK (A.S.X.O.T.V) 型输入轴功率及输出轴扭矩表 Input and output

输入轴转速 Speed of input shaft:1500r/min

功率及扭矩 power and torque / 传动比 transmission ratio / 型号 size	输入轴功率 Input (kW)								输出轴扭矩 Output (Nm)							
	10	15	20	25	30	40	50	60	10	15	20	25	30	40	50	60
40	0.40	0.33	0.26	0.24	0.22	0.16	0.14	0.12	19	23	20	25	25	20	22	20
50	0.65	0.52	0.40	0.37	0.34	0.27	0.24	0.20	31	36	32	38	39	36	37	35
60	1.00	0.82	0.65	0.59	0.54	0.45	0.40	0.32	50	58	56	68	62	71	75	59
70	1.60	1.35	1.10	0.96	0.82	0.67	0.61	0.52	83	98	101	112	99	104	113	97
80	2.20	1.78	1.36	1.28	1.20	0.90	0.80	0.75	113	133	120	149	151	140	145	146
100	3.60	3.10	2.60	2.35	2.10	1.68	1.30	1.00	193	237	258	284	277	291	257	229
120	5.20	4.35	3.50	3.25	3.00	2.20	1.90	1.50	262	336	361	404	413	392	399	355
135	9.75	7.85	6.00	5.50	5.00	3.69	2.89	2.30	540	622	619	696	707	667	626	562
147	10.71	8.43	6.18	5.71	5.23	3.84	3.09	2.52	586	676	637	727	739	694	669	616
155	12.80	9.90	7.00	6.53	6.00	4.40	3.61	3.00	709	785	722	842	848	784	770	791
175	17.30	13.60	10.00	9.13	8.30	6.18	4.85	4.07	958	1091	1044	1221	1189	1133	1127	1078
200	22.60	18.20	13.86	12.75	11.67	8.78	6.71	5.58	1280	1477	1482	1643	1782	1654	1516	1449
250	33.20	27.40	21.60	20.00	18.43	14.00	10.43	8.62	1881	2266	2310	2579	2745	2674	2357	2371

注：型号 147 暂无 WPW (A.S.X.O.T.V)及 WPWK (A.S.O.T.V)
Note: WPWD(A.S.X.O.T.V) 147 and WPWDK(A.S.O.T.V) 147 be pending

WPD.WPDK.WPWD.WPWDK.(A.S.X.O.T.V)型输入轴功率及输出轴扭矩表 Input and output

输入轴转速 Speed of input shaft:1500r/min (配用Y系列电机 Matching electric motor series Y)

功率及扭矩 power and torque / 传动比 transmission ratio / 型号 size	输入轴功率 Input (kW)								输出轴扭矩 Output (Nm)							
	10	15	20	25	30	40	50	60	10	15	20	25	30	40	50	60
40	0.12								6	8	9	13	14	15	19	20
50	0.18								9	12	14	19	20	24	28	34
60	0.37								19	26	34	42	42	58	67	73
70	0.75					0.37			39	54	70	87	95	58	68	70
80	1.5					0.75			77	112	142	174	189	117	136	146
100	1.5								80	115	149	181	198	260	307	344
120	3					2.2			151	232	310	372	413	392	480	521
135	4					3			219	321	413	509	565	542	649	690
147	4					3			219	321	413	509	565	542	649	690
155	5.5					4			305	411	525	709	760	713	853	1039
175	7.5					5.5			415	602	783	1002	1074	1008	1278	1450
200	11					7.5			623	892	1176	1417	1680	1413	1695	1948
250	15					11			850	1246	1604	1933	2234	2101	2486	3025

注：型号 147 暂无 WPWD (A.S.X.O.T.V)及 WPWDK(A.S.O.T.V)
Note: WPWD(A.S.X.O.T.V) 147 and WPWDK(A.S.O.T.V) 147 be pending

WPE. WPEK. WPWE. WPWEK
WPED. WPEDK. WPWED. WPWEDK (A.S.X.O) 型

输入轴功率及输出轴扭矩表 Input and output

输入轴转速 Speed of Input shaft:1500r/min

型号 size	功率及转矩 power and torque	WPE、WPEK、WPWE、WPWEK 传动比 transmission ratio							WPED、WPEDK、WPWED、WPWEDK 传动比 transmission ratio						
		200	300	400	500	600	800	900	200	300	400	500	600	800	900
40/70	输入轴功率 power (kW)	0.48	0.34	0.28	0.25	0.23	0.20	0.17	0.12	0.12	0.12	0.12	0.12	0.12	0.12
	输出轴扭矩 torque (Nm)	250	250	250	250	250	250	250	63	88	107	120	130	150	177
50/80	输入轴功率 power (kW)	0.65	0.51	0.42	0.38	0.31	0.29	0.25	0.18	0.18	0.18	0.18	0.18	0.18	0.18
	输出轴扭矩 torque (Nm)	350	350	350	350	350	350	350	97	124	150	166	203	217	252
60/100	输入轴功率 power (kW)	0.95	0.67	0.52	0.44	0.40	0.35	0.33	0.37	0.37	0.37	0.37	0.37	0.37	0.37
	输出轴扭矩 torque (Nm)	500	500	500	500	500	500	500	195	276	356	420	463	529	561
70/120	输入轴功率 power (kW)	1.64	1.18	0.91	0.84	0.71	0.58	0.54	0.75	0.75	0.75	0.75	0.75	0.37	0.75
	输出轴扭矩 torque (Nm)	840	840	840	840	840	840	840	384	534	692	750	840	536	887
80/135	输入轴功率 power (kW)	2.50	1.75	1.39	1.19	1.08	0.98	0.85	1.5	1.5	1.5	1.5	0.75	0.75	1.5
	输出轴扭矩 torque (Nm)	1400	1400	1400	1400	1400	1400	1400	616	880	1108	1294	1010	1071	1426
80/147	输入轴功率 power (kW)	2.79	2.1	1.71	1.47	1.34	1.20	1.06	1.5	1.5	1.5	1.5	0.75	0.75	1.5
	输出轴扭矩 torque (Nm)	1575	1575	1575	1575	1575	1575	1575	662	902	1208	1316	1300	1321	1575
100/155	输入轴功率 power (kW)	3.69	2.92	2.41	2.07	1.89	1.69	1.50	1.5	1.5	1.5	1.5	1.5	1.5	1.5
	输出轴扭矩 torque (Nm)	2100	2100	2100	2100	2100	2100	2100	854	1079	1307	1522	1667	1864	2100
120/175	输入轴功率 power (kW)	5.09	3.91	3.27	2.72	2.53	2.50	2.05	3	3	3	3	2.2	2.2	3
	输出轴扭矩 torque (Nm)	3050	3050	3050	3050	3050	3050	3050	1798	2340	2798	3050	2500	2685	3050
135/200	输入轴功率 power (kW)	7.22	5.41	4.46	3.83	3.46	2.91	2.71	4	4	4	4	3	3	4
	输出轴扭矩 torque (Nm)	3950	3950	3950	3950	3950	3950	3950	2188	2920	3543	3950	3950	3950	3950
155/250	输入轴功率 power (kW)	11.71	8.14	6.00	5.14	4.67	4.07	3.67	5.5	5.5	5.5	5.5	4	4	5.5
	输出轴扭矩 torque (Nm)	6050	6050	6050	6050	6050	6050	6050	2841	4087	5546	6050	6050	6050	6050

注：型号 80-147 暂无 WPW E(A.S.X.O.)及 WPWEK(A.S.O.)
Note: WPWE(A.S.X.O)80–147 and WPWEK(A.S.O) 147 be pending

润滑油注油量（L）
Adding Capacity of lubrication oil

型号 Size \ 机型 Type	WP(D.K)A	WP(D.K)S	WP(D.K)X.O	WPW(D)
40	0.1	0.2	0.2	0.2
50	0.2	0.4	0.5	0.4
60	0.3	0.5	0.6	0.5
70	0.6	0.9	1.2	0.8
80	1	1.3	1.5	1.5
100	1.7	2.7	3.9	2.6
120	2.8	4.5	5.8	4.5
135	4.5	7.2	8.6	5.6
147	4.2	7	11.1	-
155	5.9	10.3	14.2	11.7
175	7.5	12.1	16.7	13.9
200	12.2	18.9	27.2	16.7
250	22	33.9	48.9	30

实际传动比
Actual Ratio

型号 Size \ 实际传动比 Actual Ratio \ 名义传动比 Ratio	10	15	20	25	30	40	50	60
40	10	15	20	25	30	40	50	60
50	10	15	20	25	30	40	50	60
60	10	15	20	25	30	39	50	60
70	10	15	20	25	30	40	50	60
80	10	15	20	25	30	40	50	60
100	10	15	20	25	30	40	50	60
120	10	15	19.5	25	30	39	50	60
135	10	15	20	25	30	40	50	60
147	9.667	14.5	20	25	29	40	50	61
155	10	15	20	25	30	40	50	59
175	10	15	20	25	30	40	50	60
200	10	15	20.5	25	30	41	50	60
250	10.25	15.25	20.5	25	30.5	41	50	61

6. 安装尺寸
Mounting Dimensions

WPA 型

轴指向表示 SHAFT DIRECTION

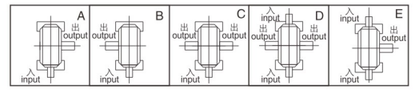

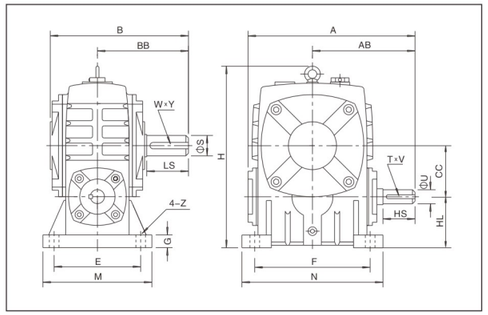

型号 size	传动比 ratio	A	AB	B	BB	CC	H	HL	M	N	E	F	G	Z	输入轴 input shaft HS	U	T×V	输出轴 output shaft LS	S	W×Y	重量 weight(kg)
40	10 15 20 25 30 40 50 60	142	87	115	74	40	130	40	90	100	70	80	13	10	25	12	4×2.5	28	14	5×3	4
50		176	108	149	97	50	165	50	120	140	95	110	15	12	30	12	4×2.5	40	17	5×3	7
60		196	120	166	112	60	195	60	130	150	105	120	20	12	40	15	5×3	50	22	6×3.5	10
70		234	140	193	131	70	228	70	150	190	115	150	20	15	40	18	6 × 3.5	60	28	8×4	15
80		261	160	213	142	80	255	80	170	220	135	180	20	15	50	22	6×3.5	65	32	10×5	20
100		318	190	251	169	100	315	100	190	270	155	220	25	15	50	25	8×4	75	38	10×5	35
120		367	219	280	190	120	425	120	230	320	180	260	30	18	65	30	8×4	85	45	14×5.5	60
135		419	249	311	210	135	480	135	250	350	200	290	30	18	75	35	10×5	95	55	16×6	80
147		429	256	320	210	147	475	123	250	350	200	280	32	18	75	35	10×5	95	55	16 × 6	90
155		495	295	381	252	155	530	135	275	390	220	320	35	21	85	40	12×5	110	60	18 × 7	110
175		532	314	393	255	175	605	160	310	430	250	350	40	21	85	45	14×5.5	110	65	18×7	150
200		577	342	450	294	200	665	175	360	480	290	390	40	24	95	50	14 × 5.5	125	70	20×7.5	215
250		701	420	550	360	250	790	200	460	560	380	480	45	28	110	60	18 × 7	155	90	25×9	360

WPS 型

轴指向表示 SHAFT DIRECTION

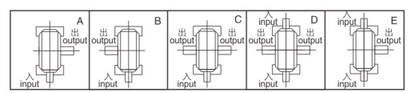

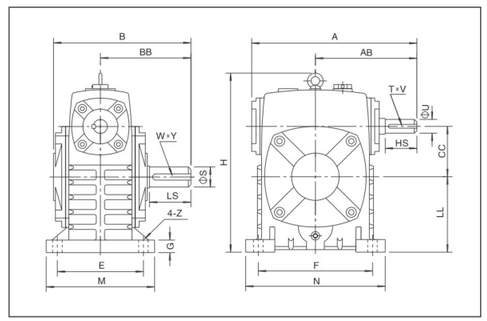

型号 size	传动比 ratio	A	AB	B	BB	CC	H	LL	M	N	E	F	G	Z	输入轴 input shaft HS	U	T×V	输出轴 output shaft LS	S	W×Y	重量 weight(kg)
40	10 15 20 25 30 40 50 60	142	87	115	74	40	135	60	90	100	70	80	13	10	25	12	4×2.5	28	14	5×3	4
50		176	108	149	97	50	167	80	120	140	95	110	15	12	30	12	4×2.5	40	17	5×3	7
60		196	120	166	112	60	195	90	130	150	105	120	20	12	40	15	5×3	50	22	6×3.5	10
70		234	140	193	131	70	225	105	150	190	115	150	20	15	40	18	6×3.5	60	28	8×4	15
80		261	160	213	142	80	265	120	170	220	135	180	20	15	50	22	6×3.5	65	32	10×5	20
100		318	190	251	169	100	315	150	190	270	155	220	25	15	50	25	8×4	75	38	10×5	35
120		367	219	280	190	120	415	180	230	320	180	260	30	18	65	30	8×4	85	45	14×5.5	60
135		419	249	311	210	135	480	215	250	350	200	290	30	18	75	35	10×5	95	55	16×6	80
147		429	256	320	210	147	485	203	250	350	200	280	32	18	75	35	10×5	95	55	16×6	90
155		495	295	381	252	155	540	235	275	390	220	320	35	21	85	40	12×5	110	60	18×7	110
175		532	314	393	255	175	600	260	310	430	250	350	40	21	85	45	14×5.5	110	65	18×7	150
200		577	342	450	294	200	675	290	360	480	290	390	40	24	95	50	14×5.5	125	70	20×7.5	215
250		701	420	550	360	250	820	350	460	560	380	480	45	28	110	60	18×7	155	90	25×9	360

WPX 型

WPX 轴指向表示
SHAFT DIRECTION

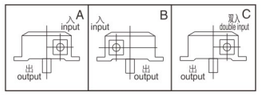

WPO 型

WPO 轴指向表示
SHAFT DIRECTION

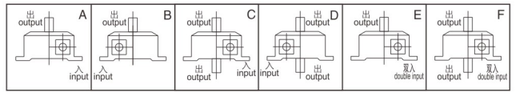

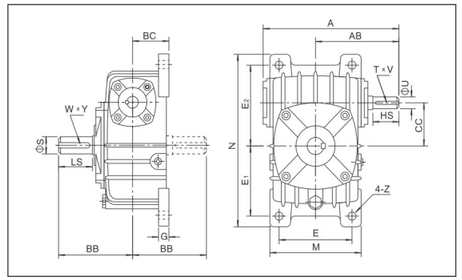

型号 size	传动比 ratio	A	AB	BB	BC	CC	M	N	E	E_1	E_2	G	Z	输入轴 input shaft HS	U	T×V	输出轴 output shaft LS	S	W×Y	重量 weight(kg)
40	10 15 20 25 30 40 50 60	142	87	74	45	40	94	184	70	74	86	10	10	25	12	4×2.5	28	14	5×3	5
50		176	108	97	50	50	116	220	90	93	102	15	12	30	12	4×2.5	40	17	5×3	6
60		196	120	112	55	60	126	260	100	105	120	20	12	40	15	5×3	50	22	6×3.5	10
70		234	140	131	65	70	156	295	120	120	135	20	15	40	18	6×3.5	60	28	8×4	15
80		261	160	142	70	80	175	320	140	130	150	20	15	50	22	6×3.5	65	32	10×5	20
100		318	190	169	90	100	224	375	190	155	180	26	15	50	25	8×4	75	38	10×5	35
120		367	219	190	100	120	266	450	220	185	215	30	18	65	30	8×4	85	45	14×5.5	50
135		419	249	210	110	135	306	495	260	210	235	30	18	75	35	10×5	95	55	16×6	75
147		429	256	210	113	147	302	558	250	254	254	32	18	75	35	10×5	95	55	16×6	90
155		495	295	252	140	155	350	590	290	245	295	35	21	85	40	12×5	110	60	18×7	115
175		532	314	255	150	175	394	640	320	267	323	40	21	85	45	14×5.5	110	65	18×7	140
200		577	342	294	175	200	440	710	370	290	360	40	24	95	50	14×5.5	125	70	20×7.5	200
250		701	420	360	200	250	510	860	440	350	440	45	28	110	60	18×7	155	90	25×9	340

WPDA 型

轴指向表示 SHAFT DIRECTION

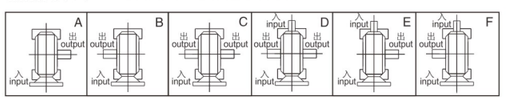

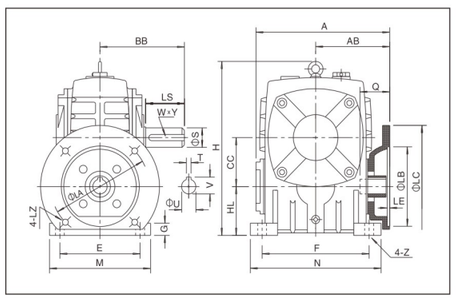

型号 size	入功率 input(kW)	传动比 ratio	A	AB	BB	CC	H	HL	M	N	E	F	G	Z	电机法兰 flange LA	LB	LC	LE	LZ	入力孔 input hole Q	U	T×V	输出轴 output shaft LS	S	W×Y	重量 weight (kg)
50	0.18	10 15 20 25 30 40 50 60	151	83	97	50	165	50	120	140	95	110	15	12	115	95	140	4	M8	31	11	4×12.8	40	17	5×3	8
60	0.37		167	91	112	60	195	60	130	150	105	120	20	12	130	110	160	4	M8	33	14	5×16.3	50	22	6×3.5	11
70	0.37		204	110	131	70	228	70	150	190	115	150	20	15	130	110	160	4	M8	40	14	5×16.3	60	28	8×4	17
	0.75		205	111											165	130	200		M10	42	19	6×21.8				
80	0.75		225	124	142	80	255	80	170	220	135	180	20	15	165	130	200	4.5	M10	48	19	6×21.8	65	32	10×5	22
	1.5																			52	24	8×27.3				
100	1.5		284	156	169	100	315	100	190	270	155	220	25	15	165	130	200	4.5	M10	52	24	8×27.3	75	38	10×5	38
120	2.2		327	179	190	120	425	120	230	320	180	260	30	18	215	180	250	5	M12	63	28	8×31.3	85	45	14×5.5	64
	3.0																									
135	3.0		373	203	210	135	480	135	250	350	200	290	30	18	215	180	250	5	M12	63	28	8×31.3	95	55	16×6	85
	4.0																									
147	3.0		378	205	210	147	475	123	250	350	200	280	32	18	215	180	250	5	M12	63	28	8×31.3	95	55	16×6	96
	4.0																									
155	4.0		426	226	252	155	530	135	275	390	220	320	35	21	215	180	250	5	M12	63	28	8×31.3	110	60	18×7	118
	5.5		429	229											265	230	300			83	38	10×41.3				
175	5.5		466	248	255	175	605	160	310	430	250	350	40	21	265	230	300	5	M12	83	38	10×41.3	110	65	18×7	165
	7.5																									
200	7.5		502	267	294	200	665	175	360	480	290	390	40	24	265	230	300	5	M12	83	38	10×41.3	125	70	20×7.5	236
	11.0		525	290											300	250	350	6	M16	114	42	12×45.3				
250	11.0		613	332	360	250	790	200	460	560	380	480	45	28	300	250	350	6	M16	114	42	12×45.3	155	90	25×9	396
	15.0																									

WPDS 型

轴指向表示 SHAFT DIRECTION

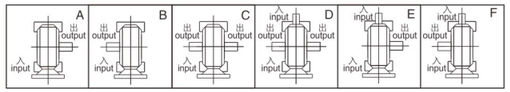

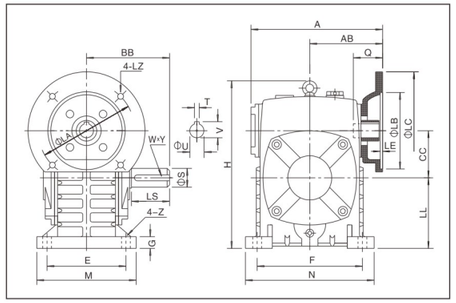

型号 size	入功率 input(kW)	传动比 ratio	A	AB	BB	CC	H	LL	M	N	E	F	G	Z	电机法兰 flange LA	LB	LC	LE	LZ	入力孔 input hole Q	U	T×V	输出轴 output shaft LS	S	W×Y	重量 weight (kg)
50	0.18	10 15 20 25 30 40 50 60	151	83	97	50	167	80	120	140	95	110	15	12	115	95	140	4	M8	31	11	4×12.8	40	17	5×3	8
60	0.37		167	91	112	60	195	90	130	150	105	120	20	12	130	110	160	4	M8	33	14	5×16.3	50	22	6×3.5	11
70	0.37		204	110	131	70	225	105	150	190	115	150	20	15	130	110	160	4	M8	40	14	5×16.3	60	28	8×4	17
	0.75		205	111											165	130	200		M10	42	19	6×21.8				
80	0.75		225	124	142	80	265	120	170	220	135	180	20	15	165	130	200	4.5	M10	48	19	6×21.8	65	32	10×5	22
	1.5																			52	24	8×27.3				
100	1.5		284	156	169	100	315	150	190	270	155	220	25	15	165	130	200	4.5	M10	52	24	8×27.3	75	38	10×5	38
120	2.2		327	179	190	120	415	180	230	320	180	260	30	18	215	180	250	5	M12	63	28	8×31.3	85	45	14×5.5	64
	3.0																									
135	3.0		373	203	210	135	480	215	250	350	200	290	30	18	215	180	250	5	M12	63	28	8×31.3	95	55	16×6	85
	4.0																									
147	3.0		378	205	210	147	485	203	250	350	200	280	32	18	215	180	250	5	M12	63	28	8×31.3	95	55	16×6	96
	4.0																									
155	4.0		426	226	252	155	540	235	275	390	220	320	35	21	215	180	250	5	M12	63	28	8×31.3	110	60	18×7	118
	5.5		429	229											265	230	300			83	38	10×41.3				
175	5.5		466	248	255	175	600	260	310	430	250	350	40	21	265	230	300	5	M12	83	38	10×41.3	110	65	18×7	165
	7.5																									
200	7.5		502	267	294	200	675	290	360	480	290	390	40	24	265	230	300	5	M12	83	38	10×41.3	125	70	20×7.5	236
	11.0		525	290											300	250	350	6	M16	114	42	12×45.3				
250	11.0		613	332	360	250	820	350	460	560	380	480	45	28	300	250	350	6	M16	114	42	12×45.3	155	90	25×9	396
	15.0																									

WPDX 型

WPDX 轴指向表示
SHAFT DIRECTION

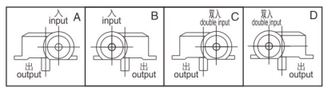

WPDO 型

WPDO 轴指向表示
SHAFT DIRECTION

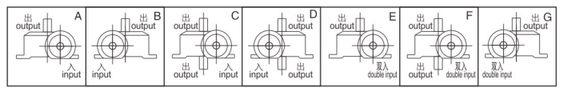

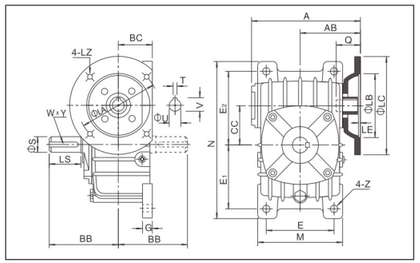

型号 size	入功率 input(kW)	传动比 ratio	A	AB	BB	BC	CC	M	N	E	E_1	E_2	G	Z	电机法兰 flange LA	LB	LC	LE	LZ	入力孔 input hole Q	U	T×V	输出轴 output shaft LS	S	W×Y	重量 weight (kg)
50	0.18	10 15 20 25 30 40 50 60	151	83	97	50	50	116	220	90	93	102	15	12	115	95	140	4	M8	31	11	4×12.8	40	17	5×3	8
60	0.37		167	91	112	55	60	126	260	100	105	120	20	12	130	110	160	4	M8	33	14	5×16.3	50	22	6×3.5	11
70	0.37		204	110	131	65	70	156	295	120	120	135	20	15	130	110	160	4	M8	40	14	5×16.3	60	28	8×4	17
	0.75		205	111											165	130	200		M10	42	19	6×21.8				
80	0.75		225	124	142	70	80	175	320	140	130	150	20	15	165	130	200	4.5	M10	48	19	6×21.8	65	32	10×5	22
	1.5																			52	24	8×27.3				
100	1.5		284	156	169	90	100	224	375	190	155	180	25	15	165	130	200	4.5	M10	52	24	8×27.3	75	38	10×5	38
120	2.2		327	179	190	100	120	266	450	220	185	215	30	18	215	180	250	5	M12	63	28	8×31.3	85	45	14×5.5	54
	3.0																									
135	3.0		373	203	210	110	135	306	495	260	210	235	30	18	215	180	250	5	M12	63	28	8×31.3	95	55	16×6	80
	4.0																									
147	3.0		378	205	210	113	147	302	558	250	254	254	32	18	215	180	250	5	M12	63	28	8×31.3	95	55	16×6	96
	4.0																									
155	4.0		426	226	252	140	155	350	590	290	245	295	35	21	215	180	250	5	M12	63	28	8×31.3	110	60	18×7	122
	5.5		429	229											265	230	300			83	38	10×41.3				
175	5.5		466	248	255	150	175	394	640	320	267	323	40	21	265	230	300	5	M12	83	38	10×41.3	110	65	18×7	154
	7.5																									
200	7.5		502	267	294	175	200	440	710	370	290	360	40	24	265	230	300	5	M12	83	38	10×41.3	125	70	20×7.5	220
	11.0		525	290											300	250	350	6	M16	114	42	12×45.3				
250	11.0		613	332	360	200	250	510	860	440	350	440	45	28	300	250	350	6	M16	114	42	12×45.3	155	90	25×9	374
	15.0																									

WPKA 型

轴指向表示
SHAFT DIRECTION

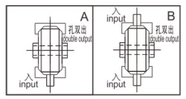

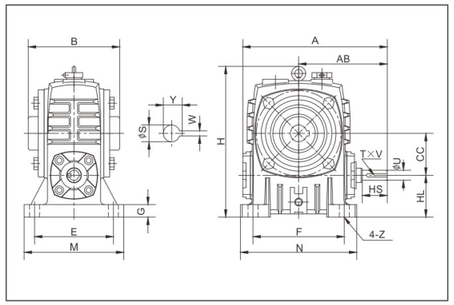

型号 size	减速比 ratio	A	AB	B	CC	H	HL	M	N	E	F	G	Z	输入轴 input shaft HS	U	T×V	输出轴 ouput shaft S	W×Y	重量 weight (kg)
50	10 15 20 25 30 40 50 60	176	108	105	50	165	50	120	140	95	110	15	12	30	12	4×2.5	20	6×22.8	7
60		196	120	110	60	195	60	130	150	105	120	20	12	40	15	5×3	25	8×28.3	10
70		234	140	130	70	228	70	150	190	115	150	20	15	40	18	6×3.5	30	8×33.3	15
80		261	160	150	80	255	80	170	220	135	180	20	15	50	22	6×3.5	35	10×38.3	20
100		318	190	160	100	315	100	190	270	155	220	25	15	50	25	8×4	40	12×43.3	35
120		367	219	175	120	425	120	230	320	180	260	30	18	65	30	8×4	45	14×48.8	60
135		419	249	210	135	480	135	250	350	200	290	30	18	75	35	10×5	60	18×64.4	80
155		495	295	256	155	530	135	275	390	220	320	35	21	85	40	12×5	70	20×74.9	110
175		532	314	282	175	605	160	310	430	250	350	40	21	85	45	14×5.5	80	22×85.4	150
200		577	342	320	200	665	175	360	480	290	390	40	24	95	50	14×5.5	85	22×90.4	215
250		701	420	400	250	790	200	460	560	380	480	45	28	110	60	18×7	110	28×116.4	360

WPKS 型

轴指向表示
SHAFT DIRECTION

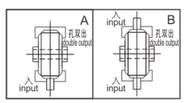

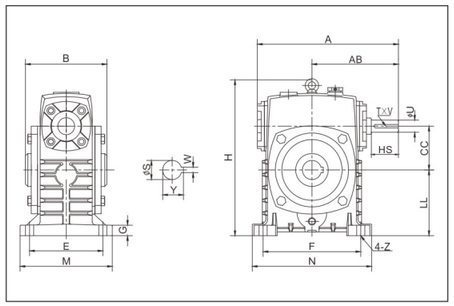

型号 size	减速比 ratio	A	AB	B	CC	H	LL	M	N	E	F	G	Z	输入轴 input shaft HS	U	T×V	输出轴 ouput shaft S	W×Y	重量 weight (kg)
50	10 15 20 25 30 40 50 60	176	108	105	50	167	80	120	140	95	110	15	12	30	12	4×2.5	20	6×22.8	7
60		196	120	110	60	195	90	130	150	105	120	20	12	40	15	5×3	25	8×28.3	10
70		234	140	130	70	225	105	150	190	115	150	20	15	40	18	6×3.5	30	8×33.3	15
80		261	160	150	80	265	120	170	220	135	180	20	15	50	22	6×3.5	35	10×38.3	20
100		318	190	160	100	315	150	190	270	155	220	25	15	50	25	8×4	40	12×43.3	35
120		367	219	175	120	415	180	230	320	180	260	30	18	65	30	8×4	45	14×48.8	60
135		419	249	210	135	480	215	250	350	200	290	30	18	75	35	10×5	60	18×64.4	80
155		495	295	256	155	540	235	275	390	220	320	35	21	85	40	12×5	70	20×74.9	110
175		532	314	282	175	600	260	310	430	250	350	40	21	85	45	14×5.5	80	22×85.4	150
200		577	342	320	200	675	290	360	480	290	390	40	24	95	50	14×5.5	85	22×90.4	215
250		701	420	400	250	820	350	460	560	380	480	45	28	110	60	18×7	110	28×116.4	360

WPDKA 型

轴指向表示 SHAFT DIRECTION

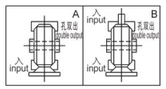

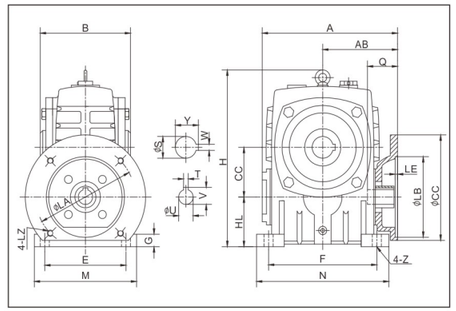

型号 size	入功率 input(kW)	传动比 ratio	A	AB	B	CC	H	HL	M	N	E	F	G	Z	电机法兰 flange LA	LB	LC	LE	LZ	入力孔 input hole Q	U	T×V	输出轴 output shaft S	W×Y	重量 weight (kg)
50	0.18	10 15 20 25 30 40 50 60	151	83	105	50	165	50	120	140	95	110	15	12	115	95	140	4	M8	31	11	4×12.8	20	6×22.8	8
60	0.37		167	91	110	60	195	60	130	150	105	120	20	12	130	110	160	4	M8	33	14	5×16.3	25	8×28.3	11
70	0.37		204	110	130	70	228	70	150	190	115	150	20	15	130	110	160	4	M8	40	14	5×16.3	30	8×33.3	17
	0.75		205	111											165	130	200		M10	42	19	6×21.8			
80	0.75		225	124	150	80	255	80	170	220	135	180	20	15	165	130	200	4.5	M10	48	19	6×21.8	35	10×38.3	22
	1.5																			52	24	8×27.3			
100	1.5		284	156	160	100	315	100	190	270	155	220	25	15	165	130	200	4.5	M10	52	24	8×27.3	40	12×43.3	38
120	2.2		327	179	175	120	425	120	230	320	180	260	30	18	215	180	250	5	M12	63	28	8×31.3	45	14×48.8	64
	3.0																								
135	3.0		373	203	210	135	480	135	250	350	200	290	30	18	215	180	250	5	M12	63	28	8×31.3	60	18×64.4	85
	4.0																								
155	4.0		426	226	256	155	530	135	275	390	220	320	35	21	215	180	250	5	M12	63	28	8×31.3	70	20×74.9	118
	5.5		429	229											265	230	300			83	38	10×41.3			
175	5.5		466	248	282	175	605	160	310	430	250	350	40	21	265	230	300	5	M12	83	38	10×41.3	80	22×85.4	165
	7.5																								
200	7.5		502	267	320	200	665	175	360	480	290	390	40	24	265	230	300	5	M12	83	38	10×41.3	85	22×90.4	236
	11.0		525	290											300	250	350	6	M16	114	42	12×45.3			
250	11.0		613	332	400	250	790	200	460	560	380	480	45	28	300	250	350	6	M16	114	42	12×45.3	110	28×116.4	396
	15.0																								

WPDKS 型

轴指向表示 SHAFT DIRECTION

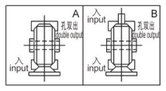

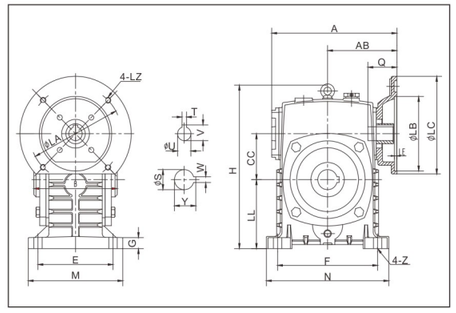

型号 size	入功率 input(kW)	传动比 ratio	A	AB	B	CC	H	LL	M	N	E	F	G	Z	电机法兰 flange LA	LB	LC	LE	LZ	入力孔 input hole Q	U	T×V	输出轴 output shaft S	W×Y	重量 weight (kg)
50	0.18	10 15 20 25 30 40 50 60	151	83	105	50	167	80	120	140	95	110	15	12	115	95	140	4	M8	31	11	4×12.8	20	6×22.8	8
60	0.37		167	91	110	60	195	90	130	150	105	120	20	12	130	110	160	4	M8	33	14	5×16.3	25	8×28.3	11
70	0.37		204	110	130	70	225	105	150	190	115	150	20	15	130	110	160	4	M8	40	14	5×16.3	30	8×33.3	17
	0.75		205	111											165	130	200		M10	42	19	6×21.8			
80	0.75		225	124	150	80	265	120	170	220	135	180	20	15	165	130	200	4.5	M10	48	19	6×21.8	35	10×38.3	22
	1.5																			52	24	8×27.3			
100	1.5		284	156	160	100	315	150	190	270	155	220	25	15	165	130	200	4.5	M10	52	24	8×27.3	40	12×43.3	38
120	2.2		327	179	175	120	415	180	230	320	180	260	30	18	215	180	250	5	M12	63	28	8×31.3	45	14×48.8	64
	3.0																								
135	3.0		373	203	210	135	480	215	250	350	200	290	30	18	215	180	250	5	M12	63	28	8×31.3	60	18×64.4	85
	4.0																								
155	4.0		426	226	256	155	540	235	275	390	220	320	35	21	215	180	250	5	M12	63	28	8×31.3	70	20×74.9	118
	5.5		429	229											265	230	300			83	38	10×41.3			
175	5.5		466	248	282	175	600	260	310	430	250	350	40	21	265	230	300	5	M12	83	38	10×41.3	80	22×85.4	165
	7.5																								
200	7.5		502	267	320	200	675	290	360	480	290	390	40	24	265	230	300	5	M12	83	38	10×41.3	85	22×90.4	236
	11.0		525	290											300	250	350	6	M16	114	42	12×45.3			
250	11.0		613	332	400	250	820	350	460	560	380	480	45	28	300	250	350	6	M16	114	42	12×45.3	110	28×116.4	396
	15.0																								

WPW 型

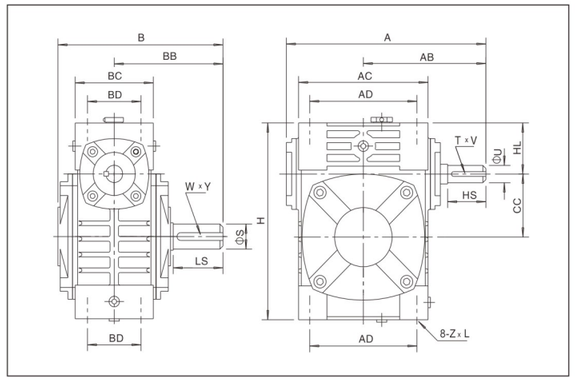

轴指向表示 SHAFT DIRECTION

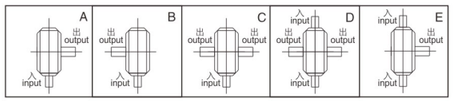

型号 size	传动比 ratio	A	AB	B	BB	AC	BC	AD	BD	CC	HL	H	Z×L	输入轴 input shaft HS	U	T×V	输出轴 output shaft LS	S	W×Y	重量 weight(kg)
40	10 15 20 25 30 40 50 60	142	87	115	74	95	61	78	42	40	35	125	M6×12	25	12	4×2.5	28	14	5×3	4
50		176	108	149	97	111	68	85	50	50	35	150	M6×18	30	12	4×2.5	40	17	5×3	6.5
60		196	120	166	112	127	76	105	55	60	42	177	M8×20	40	15	5×3	50	22	6×3.5	9
70		234	140	193	131	152	86	125	65	70	55	215	M10×25	40	18	6×3.5	60	28	8×4	13
80		261	160	213	142	169	102	140	70	80	65	250	M12×28	50	22	6×3.5	65	32	10×5	21
100		318	190	251	169	216	117	180	90	100	80	310	M12×30	50	25	8×4	75	38	10×5	34
120		367	219	280	190	256	124	220	100	120	95	370	M14×32	65	30	8×4	85	45	14×5.5	51
135		419	249	311	210	296	147	260	110	135	105	425	M16×35	75	35	10×5	95	55	16×6	78
155		495	295	381	252	345	185	280	120	155	103	461	M16×35	85	40	12×5	110	60	18×7	102
175		532	314	393	255	374	192	320	140	175	123	521	M16×35	85	45	14×5.5	110	65	18×7	142
200		577	342	450	294	412	230	360	150	200	130	575	M20×36	95	50	14×5.5	125	70	20×7.5	202
250		701	420	550	360	500	285	420	190	250	150	700	M24×42	110	60	18×7	155	90	25×9	340

WPWA 型

WPWS 型

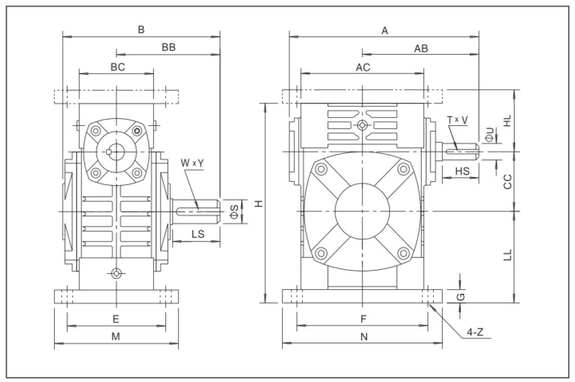

轴指向表示 SHAFT DIRECTION

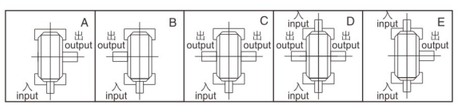

型号 size	传动比 ratio	A	AB	B	BB	AC	BC	CC	HL	LL	H	M	N	E	F	G	Z	输入轴 input shaft HS	U	T×V	输出轴 output shaft LS	S	W×Y	重量 weight (kg)
40	10 15 20 25 30 40 50 60	142	87	115	74	95	61	40	45	60	135	100	130	80	110	10	10	25	12	4×2.5	28	14	5×3	4.5
50		176	108	149	97	111	68	50	50	80	165	120	140	95	110	15	12	30	12	4×2.5	40	17	5×3	7.5
60		196	120	166	112	127	76	60	60	93	195	130	150	105	120	18	12	40	15	5×3	50	22	6×3.5	11.5
70		234	140	193	131	152	86	70	73	108	233	150	190	115	150	18	15	40	18	6×3.5	60	28	8×4	15.5
80		261	160	213	142	169	102	80	83	123	268	170	220	135	180	18	15	50	22	6×3.5	65	32	10×5	24
100		318	190	251	169	216	117	100	100	150	330	190	270	155	220	20	15	50	25	8×4	75	38	10×5	39
120		367	219	280	190	256	124	120	120	180	395	230	320	180	260	25	18	65	30	8×4	85	45	14×5.5	57
135		419	249	311	210	296	147	135	135	215	455	250	350	200	290	30	18	75	35	10×5	95	55	16×6	85
155		495	295	381	252	345	185	155	135	235	493	280	380	220	320	32	21	85	40	12×5	110	60	18×7	110
175		532	314	393	255	374	192	175	160	260	558	310	410	250	350	37	21	85	45	14×5.5	110	65	18×7	152
200		577	342	450	294	412	230	200	175	290	620	355	445	290	390	45	24	95	50	14×5.5	125	70	20×7.5	216
250		701	420	550	360	500	285	250	200	350	750	460	560	380	480	50	28	110	60	18×7	155	90	25×9	350

WPWX 型

WPWO 型

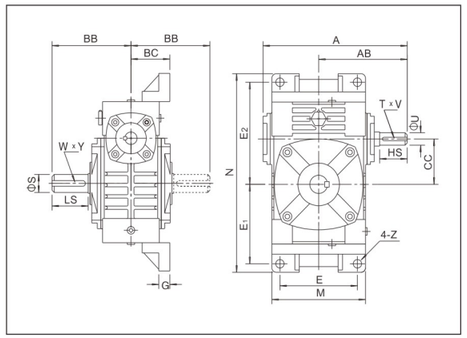

WPWX 轴指向表示
SHAFT DIRECTION

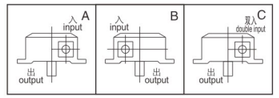

WPWO 轴指向表示
SHAFT DIRECTION

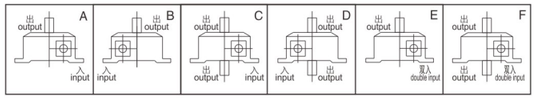

型号 size	传动比 ratio	A	AB	BB	BC	CC	M	N	E	E_1	E_2	G	Z	输入轴 input shaft HS	U	T×V	输出轴 output shaft LS	S	W×Y	重量 weight(kg)
40	10 15 20 25 30 40 50 60	142	87	74	45	40	95	187	70	72	97	12	10	25	12	4×2.5	28	14	5×3	5
50		176	108	97	50	50	111	226	90	90	110	14	12	30	12	4×2.5	40	17	5×3	8
60		196	120	112	55	60	127	257	100	102	129	15	12	40	15	5×3	50	22	6×3.5	11
70		234	140	131	65	70	152	305	120	120	155	20	15	40	18	6×3.5	60	28	8×4	15.5
80		261	160	142	70	80	174	350	140	140	180	20	15	50	22	6×3.5	65	32	10×5	24
100		318	190	169	90	100	224	410	190	165	215	22	15	50	25	8×4	75	38	10×5	38
120		367	219	190	100	120	264	494	220	195	255	25	18	65	30	8×4	85	45	14×5.5	56
135		419	249	210	110	135	304	559	260	230	285	30	18	75	35	10×5	95	55	16×6	84
155		495	295	252	140	155	345	605	290	250	305	35	21	85	40	12×5	110	60	18×7	129
175		532	314	255	150	175	374	675	320	273	348	40	21	85	45	14×5.5	110	65	18×7	157
200		577	342	294	175	200	424	749	370	305	390	40	24	95	50	14×5.5	125	70	20×7.5	224
250		701	420	360	200	250	510	920	440	375	475	45	28	110	60	18×7	155	90	25×9	374

WPWT 型

WPWV 型

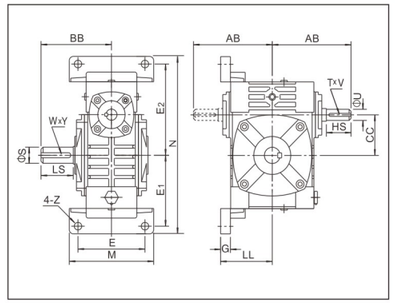

WPWT 轴指向表示
SHAFT DIRECTION

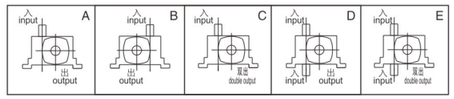

WPWV 轴指向表示
SHAFT DIRECTION

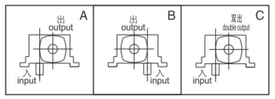

型号 size	传动比 ratio	AB	BB	CC	LL	M	N	E	E_1	E_2	G	Z	输入轴 input shaft HS	U	T×V	输出轴 output shaft LS	S	W×Y	重量 weight(kg)
40	10 15 20 25 30 40 50 60	87	74	40	63	90	187	70	72	97	12	10	25	12	4×2.5	28	14	5×3	5
50		108	97	50	70	120	226	95	90	110	14	12	30	12	4×2.5	40	17	5×3	8
60		120	112	60	80	130	257	105	102	129	15	12	40	15	5×3	50	22	6×3.5	11
70		140	131	70	95	150	305	115	120	155	20	15	40	18	6×3.5	60	28	8×4	15.5
80		160	142	80	105	170	350	135	140	180	20	15	50	22	6×3.5	65	32	10×5	24
100		190	169	100	135	190	410	155	165	215	22	15	50	25	8×4	75	38	10×5	38
120		219	190	120	160	230	494	180	195	255	25	18	65	30	8×4	85	45	14×5.5	56
135		249	210	135	185	250	559	200	230	285	30	18	75	35	10×5	95	55	16×6	84
155		295	252	155	220	275	605	220	250	305	35	21	85	40	12×5	110	60	18×7	129
175		314	255	175	240	310	675	250	273	348	40	21	85	45	14×5.5	110	65	18×7	157
200		342	294	200	280	360	749	290	305	390	40	24	95	50	14×5.5	125	70	20×7.5	224
250		420	360	250	315	460	920	380	375	475	45	28	110	60	18×7	155	90	25×9	374

WPWD 型

轴指向表示 SHAFT DIRECTION

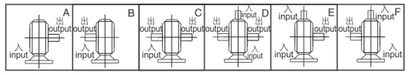

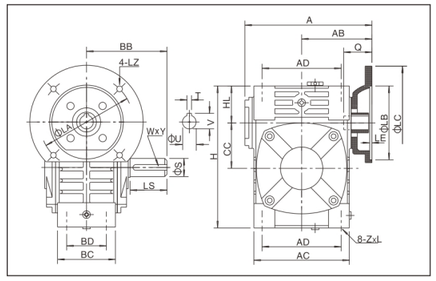

型号 size	入功率 input(kW)	传动比 ratio	A	AB	BB	AC	BC	AD	BD	CC	HL	H	Z×L	电机法兰 flange LA	LB	LC	LE	LZ	入力孔 input hole Q	U	T×V	输出轴 output shaft LS	S	W×Y	重量 weight (kg)
40	0.12	10 15 20 25 30 40 50 60	127	72	74	95	61	78	42	40	35	125	M6×12	115	95	140	4	M8	31	11	4×12.8	28	14	5×3	4
50	0.18		151	83	97	111	68	85	50	50	35	150	M6×18	115	95	140	4	M8	31	11	4×12.8	40	17	5×3	7
60	0.37		167	91	112	127	76	105	55	60	42	177	M8×20	130	110	160	4	M8	33	14	5×16.3	50	22	6×3.5	10
70	0.37		204	110	131	152	86	125	65	70	55	215	M10×25	130	110	160	4	M8	40	14	5×16.3	60	28	8×4	14.5
	0.75		205	111										165	130	200		M10	42	19	6×21.8				
80	0.75		225	124	142	169	102	140	70	80	65	250	M12×28	165	130	200	4.5	M10	48	19	6×21.8	65	32	10×5	23
	1.5																		52	24	8×27.3				
100	1.5		284	156	169	216	117	180	90	100	80	310	M12×30	165	130	200	4.5	M10	52	24	8×27.3	75	38	10×5	36.5
120	2.2		327	179	190	256	124	220	100	120	95	370	M14×32	215	180	250	5	M12	63	28	8×31.3	85	45	14×5.5	54
	3.0																								
135	3.0		373	203	210	296	147	260	110	135	105	425	M16×35	215	180	250	5	M12	63	28	8×31.3	95	55	16×6	83
	4.0																								
155	4.0		426	226	252	345	185	280	120	155	103	461	M16×35	215	180	250	5	M12	63	28	8×31.3	110	60	18×7	110
	5.5		429	229										265	230	300			83	38	10×41.3				
175	5.5		466	248	255	374	192	320	140	175	123	521	M16×35	265	230	300	5	M12	83	38	10×41.3	110	65	18×7	156
	7.5																								
200	7.5		502	267	294	412	230	360	150	200	130	575	M20×36	265	230	300	5	M12	83	38	10×41.3	125	70	20×7.5	222
	11.0		525	290										300	250	350	6	M16	114	42	12×45.3				
250	11.0		613	332	360	500	285	420	190	250	150	700	M24×42	300	250	350	6	M16	114	42	12×45.3	155	90	25×9	376
	15.0																								

WPWDA 型

WPWDS 型

轴指向表示 SHAFT DIRECTION

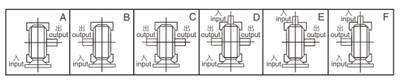

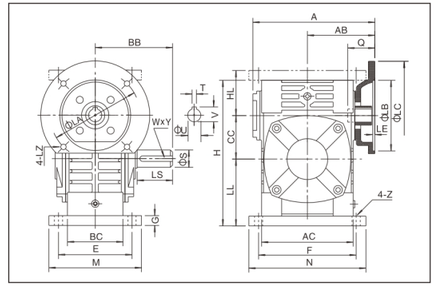

型号 size	入功率 input(kW)	传动比 ratio	A	AB	BB	AC	BC	CC	HL	LL	H	M	N	E	F	G	Z	电机法兰 flange LA	LB	LC	LE	LZ	入力孔 input hole Q	U	T×V	输出轴 output shaft LS	S	W×Y	重量 weight (kg)
40	0.12	10 15 20 25 30 40 50 60	127	72	74	95	61	40	45	60	135	100	130	80	110	10	10	115	95	140	4	M8	31	11	4×12.8	28	14	5×3	5
50	0.18		151	83	97	111	68	50	50	80	165	120	140	95	110	15	12	115	95	140	4	M8	31	11	4×12.8	40	17	5×3	8
60	0.37		167	91	112	127	76	60	60	93	195	130	150	105	120	18	12	130	110	160	4	M8	33	14	5×16.3	50	22	6×3.5	12.5
70	0.37		204	110	131	152	86	70	73	108	233	150	190	115	150	18	15	130	110	160	4	M8	40	14	5×16.3	60	28	8×4	17
	0.75		205	111														165	130	200		M10	42	19	6×21.8				
80	0.75		225	124	142	169	102	80	83	123	268	170	220	135	180	18	15	165	130	200	4.5	M10	48	19	6×21.8	65	32	10×5	26
	1.5																						52	24	8×27.3				
100	1.5		284	156	169	216	117	100	100	150	330	190	270	155	220	20	15	165	130	200	4.5	M10	52	24	8×27.3	75	38	10×5	41.5
120	2.2		327	179	190	256	124	120	120	180	395	230	320	180	260	25	18	215	180	250	5	M12	63	28	8×31.3	85	45	14×5.5	60
	3.0																												
135	3.0		373	203	210	296	147	135	135	215	455	250	350	200	290	30	18	215	180	250	5	M12	63	28	8×31.3	95	55	16×6	90
	4.0																												
155	4.0		426	226	252	345	185	155	135	235	493	280	380	220	320	32	21	215	180	250	5	M12	63	28	8×31.3	110	60	18×7	118
	5.5		429	229														265	230	300			83	38	10×41.3				
175	5.5		466	248	255	374	192	175	160	260	558	310	410	250	350	37	21	265	230	300	5	M12	83	38	10×41.3	110	65	18×7	167
	7.5																												
200	7.5		502	267	294	412	230	200	175	290	620	355	445	290	390	45	24	265	230	300	5	M12	83	38	10×41.3	125	70	20×7.5	237
	11.0		525	290														300	250	350	6	M16	114	42	12×45.3				
250	11.0		613	332	360	500	285	250	200	350	750	460	560	380	480	50	28	300	250	350	6	M16	114	42	12×45.3	155	90	25×9	395
	15.0																												

WPWDX 型

WPWDO 型

WPWDX 轴指向表示
SHAFT DIRECTION

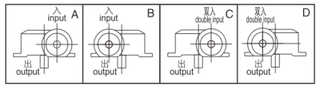

WPWDO 轴指向表示
SHAFT DIRECTION

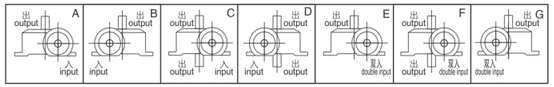

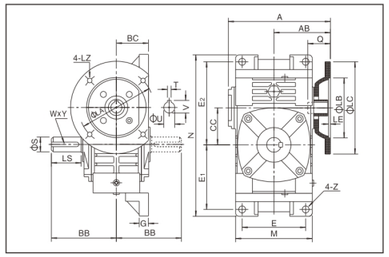

型号 size	入功率 input(kW)	传动比 ratio	A	AB	BB	BC	CC	M	N	E	E_1	E_2	G	Z	电机法兰 flange LA	LB	LC	LE	LZ	入力孔 input hole Q	U	T×V	输出轴 output shaft LS	S	W×Y	重量 weight(kg)
40	0.12	10 15 20 25 30 40 50 60	127	72	74	45	40	95	187	70	72	97	12	10	115	95	140	4	M8	31	11	4×12.8	28	14	5×3	5.4
50	0.18		151	83	97	50	50	111	226	90	90	110	14	12	115	95	140	4	M8	31	11	4×12.8	40	17	5×3	8.5
60	0.37		167	91	112	55	60	127	257	100	102	129	15	12	130	110	160	4	M8	33	14	5×16.3	50	22	6×3.5	12
70	0.37		204	110	131	65	70	152	305	120	120	155	20	15	130	110	160	4	M8	40	14	5×16.3	60	28	8×4	17
	0.75		205	111											165	130	200		M10	42	19	6×21.8				
80	0.75		225	124	142	70	80	174	350	140	140	180	20	15	165	130	200	4.5	M10	48	19	6×21.8	65	32	10×5	26
	1.5																			52	24	8×27.3				
100	1.5		284	156	169	90	100	224	410	190	165	215	22	15	165	130	200	4.5	M10	52	24	8×27.3	75	38	10×5	40.5
120	2.2		327	179	190	100	120	264	494	220	195	255	25	18	215	180	250	5	M12	63	28	8×31.3	85	45	14×5.5	59
	3.0																									
135	3.0		373	203	210	110	135	304	559	260	230	285	30	18	215	180	250	5	M12	63	28	8×31.3	95	55	16×6	89
	4.0																									
155	4.0		426	226	252	140	155	345	605	290	250	305	35	21	215	180	250	5	M12	63	28	8×31.3	110	60	18×7	138
	5.5		429	229											265	230	300			83	38	10×41.3				
175	5.5		466	248	255	150	175	374	675	320	273	348	40	21	265	230	300	5	M12	83	38	10×41.3	110	65	18×7	172
	7.5																									
200	7.5		502	267	294	175	200	424	749	370	305	390	40	24	265	230	300	5	M12	83	38	10×41.3	125	70	20×7.5	246
	11.0		525	290											300	250	350	6	M16	114	42	12×45.3				
250	11.0		613	332	360	200	250	510	920	440	375	475	45	28	300	250	350	6	M16	114	42	12×45.3	155	90	25×9	410
	15.0																									

WPWDT 型

WPWDV 型

WPWDT 轴指向表示
SHAFT DIRECTION

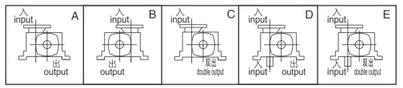

WPWDV 轴指向表示
SHAFT DIRECTION

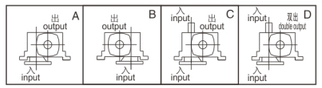

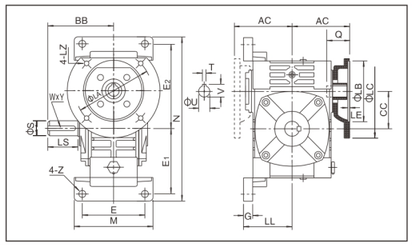

型号 size	入功率 input(kW)	传动比 ratio	AC	BB	CC	LL	M	N	E	E_1	E_2	G	Z	电机法兰 flange LA	LB	LC	LE	LZ	入力孔 input hole Q	U	T×V	输出轴 output shaft LS	S	W×Y	重量 weight(kg)
40	0.12	10 15 20 25 30 40 50 60	72	74	40	63	90	187	70	72	97	12	10	115	95	140	4	M8	31	11	4×12.8	28	14	5×3	5.4
50	0.18		83	97	50	70	120	226	95	90	110	14	12	115	95	140	4	M8	31	11	4×12.8	40	17	5×3	8.5
60	0.37		91	112	60	80	130	257	105	102	129	15	12	130	110	160	4	M8	33	14	5×16.3	50	22	6×3.5	12
70	0.37		110	131	70	95	150	305	115	120	155	20	15	130	110	160	4	M8	40	14	5×16.3	60	28	8×4	17
	0.75		111											165	130	200		M10	42	19	6×21.8				
80	0.75		124	142	80	105	170	350	135	140	180	20	15	165	130	200	4.5	M10	48	19	6×21.8	65	32	10×5	26
	1.5																		52	24	8×27.3				
100	1.5		156	169	100	135	190	410	155	165	215	22	15	165	130	200	4.5	M10	52	24	8×27.3	75	38	10×5	40.5
120	2.2		179	190	120	160	230	494	180	195	255	25	18	215	180	250	5	M12	63	28	8×31.3	85	45	14×5.5	59
	3.0																								
135	3.0		203	210	135	185	250	559	200	230	285	30	18	215	180	250	5	M12	63	28	8×31.3	95	55	16×6	89
	4.0																								
155	4.0		226	252	155	220	275	605	220	250	305	35	21	215	180	250	5	M12	63	28	8×31.3	110	60	18×7	138
	5.5		229											265	230	300			83	38	10×41.3				
175	5.5		248	255	175	240	310	675	250	273	348	40	21	265	230	300	5	M12	83	38	10×41.3	110	65	18×7	172
	7.5																								
200	7.5		267	294	200	280	360	749	290	305	390	40	24	265	230	300	5	M12	83	38	10×41.3	125	70	20×7.5	246
	11.0		290											300	250	350	6	M16	114	42	12×45.3				
250	11.0		332	360	250	315	460	920	380	375	475	45	28	300	250	350	6	M16	114	42	12×45.3	155	90	25×9	410
	15.0																								

WPWK 型

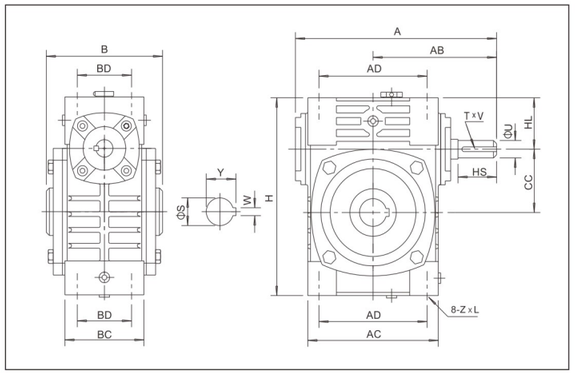

轴指向表示
SHAFT DIRECTION

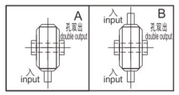

型号 size	传动比 ratio	A	AB	B	AC	BC	AD	BD	CC	HL	H	Z×L	输入轴 input shaft HS	U	T×V	输出轴 output shaft S	W×Y	重量 weight(kg)
40	10 15 20 25 30 40 50 60	142	87	85	95	61	78	42	40	35	125	M6×12	25	12	4×2.5	16	5×18.3	4
50		176	108	105	111	68	85	50	50	35	150	M6×18	30	12	4×2.5	20	6×22.8	6.5
60		196	120	110	127	76	105	55	60	42	177	M8×20	40	15	5×3	25	8×28.3	9
70		234	140	130	152	86	125	65	70	55	215	M10×25	40	18	6×3.5	30	8×33.3	13
80		261	160	150	169	102	140	70	80	65	250	M12×28	50	22	6×3.5	35	10×38.3	21
100		318	190	160	216	117	180	90	100	80	310	M12×30	50	25	8×4	40	12×43.3	34
120		367	219	175	256	124	220	100	120	95	370	M14×32	65	30	8×4	45	14×48.8	51
135		419	249	210	296	147	260	110	135	105	425	M16×35	75	35	10×5	60	18×64.4	78
155		495	295	256	345	185	280	120	155	103	461	M16×35	85	40	12×5	70	20×74.9	102
175		532	314	282	374	192	320	140	175	123	521	M16×35	85	45	14×5.5	80	22×85.4	142
200		577	342	320	412	230	360	150	200	130	575	M20×36	95	50	14×5.5	85	22×90.4	202
250		701	420	400	500	285	420	190	250	150	700	M24×42	110	60	18×7	110	28×116.4	340

WPWKA 型

WPWKS 型

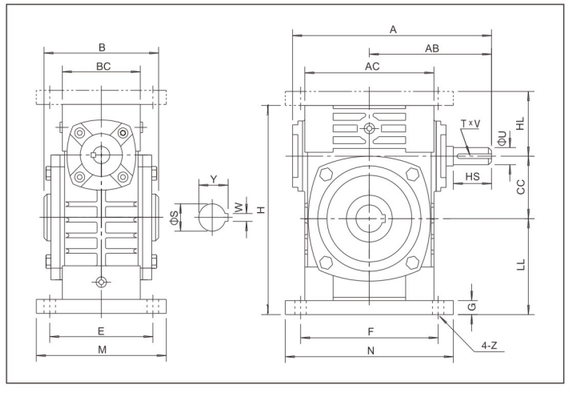

轴指向表示
SHAFT DIRECTION

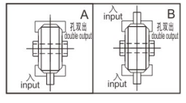

型号 size	传动比 ratio	A	AB	B	AC	BC	CC	HL	LL	H	M	N	E	F	G	Z	输入轴 input shaft HS	U	T×V	输出轴 output shaft S	W×Y	重量 weight(kg)
40	10 15 20 25 30 40 50 60	142	87	85	95	61	40	45	60	135	100	130	80	110	10	10	25	12	4×2.5	16	5×18.3	4.5
50		176	108	105	111	68	50	50	80	165	120	140	95	110	15	12	30	12	4×2.5	20	6×22.8	7.5
60		196	120	110	127	76	60	60	93	195	130	150	105	120	18	12	40	15	5×3	25	8×28.3	11.5
70		234	140	130	152	86	70	73	108	233	150	190	115	150	18	15	40	18	6×3.5	30	8×33.3	15.5
80		261	160	150	169	102	80	83	123	268	170	220	135	180	18	15	50	22	6×3.5	35	10×38.3	24
100		318	190	160	216	117	100	100	150	330	190	270	155	220	20	15	50	25	8×4	40	12×43.3	39
120		367	219	175	256	124	120	120	180	395	230	320	180	260	25	18	65	30	8×4	45	14×48.8	57
135		419	249	210	296	147	135	135	215	455	250	350	200	290	30	18	75	35	10×5	60	18×64.4	85
155		495	295	256	345	185	155	135	235	493	280	380	220	320	32	21	85	40	12×5	70	20×74.9	110
175		532	314	282	374	192	175	160	260	558	310	410	250	350	37	21	85	45	14×5.5	80	22×85.4	152
200		577	342	320	412	230	200	175	290	620	355	445	290	390	45	24	95	50	14×5.5	85	22×90.4	216
250		701	420	400	500	285	250	200	350	750	460	560	380	480	50	28	110	60	18×7	110	28×116.4	350

WPWKO 型

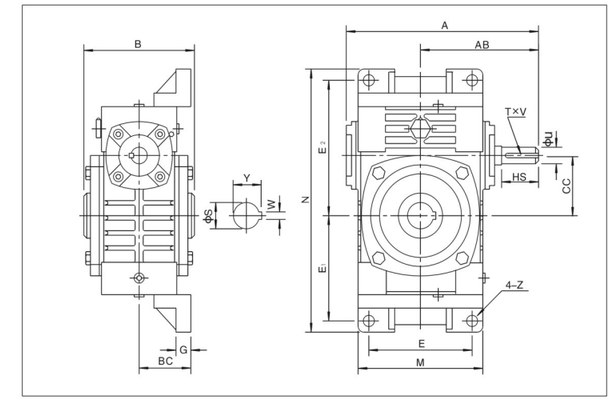

轴指向表示
SHAFT DIRECTION

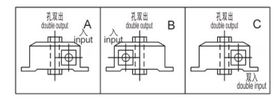

型号 size	传动比 ratio	A	AB	B	BC	CC	M	N	E	E_1	E_2	G	Z	输入轴 input shaft HS	U	T×V	输出轴 output shaft S	W×Y	重量 weight (kg)
40	10 15 20 25 30 40 50 60	142	87	85	45	40	95	187	70	72	97	12	10	25	12	4×2.5	16	5×18.3	5
50		176	108	105	50	50	111	226	90	90	110	14	12	30	12	4×2.5	20	6×22.8	8
60		196	120	110	55	60	127	257	100	102	129	15	12	40	15	5×3	25	8×28.3	11
70		234	140	130	65	70	152	305	120	120	155	20	15	40	18	6×3.5	30	8×33.3	15.5
80		261	160	150	70	80	174	350	140	140	180	20	15	50	22	6×3.5	35	10×38.3	24
100		318	190	160	90	100	224	410	190	165	215	22	15	50	25	8×4	40	12×43.3	38
120		367	219	175	100	120	264	494	220	195	255	25	18	65	30	8×4	45	14×48.8	56
135		419	249	210	110	135	304	559	260	230	285	30	18	75	35	10×5	60	18×64.4	84
155		495	295	256	140	155	345	605	290	250	305	35	21	85	40	12×5	70	20×74.9	129
175		532	314	282	150	175	374	675	320	273	348	40	21	85	45	14×5.5	80	22×85.4	157
200		577	342	320	175	200	424	749	370	305	390	40	24	95	50	14×5.5	85	22×90.4	224
250		701	420	400	200	250	510	920	440	375	475	45	28	110	60	18×7	110	28×116.4	374

WPWKT 型

WPWKV 型

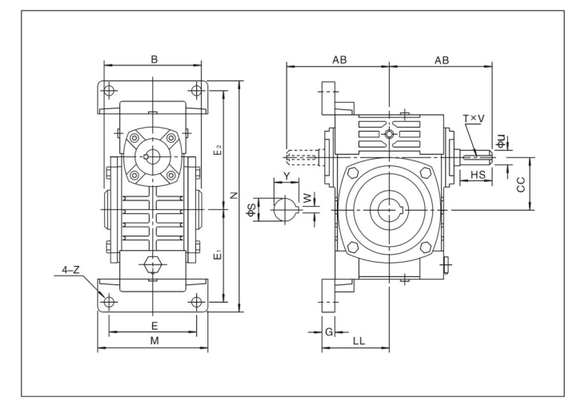

轴指向表示 SHAFT DIRECTION

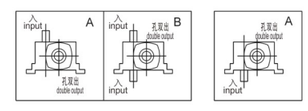

型号 size	传动比 ratio	AB	B	CC	LL	M	N	E	E_1	E_2	G	Z	输入轴 input shaft HS	U	T×V	输出轴 output shaft S	W×Y	重量 weight (kg)
40	10 15 20 25 30 40 50 60	87	85	40	63	90	187	70	72	97	12	10	25	12	4×2.5	16	5×18.3	5
50		108	105	50	70	120	226	95	90	110	14	12	30	12	4×2.5	20	6×22.8	8
60		120	110	60	80	130	257	105	102	129	15	12	40	15	5×3	25	8×28.3	11
70		140	130	70	95	150	305	115	120	155	20	15	40	18	6×3.5	30	8×33.3	15.5
80		160	150	80	105	170	350	135	140	180	20	15	50	22	6×3.5	35	10×38.3	24
100		190	160	100	135	190	410	155	165	215	22	15	50	25	8×4	40	12×43.3	38
120		219	175	120	160	230	494	180	195	255	25	18	65	30	8×4	45	14×48.8	56
135		249	210	135	185	250	559	200	230	285	30	18	75	35	10×5	60	18×64.4	84
155		295	256	155	220	275	605	220	250	305	35	21	85	40	12×5	70	20×74.9	129
175		314	282	175	240	310	675	250	273	348	40	21	85	45	14×5.5	80	22×85.4	157
200		342	320	200	280	360	749	290	305	390	40	24	95	50	14×5.5	85	22×90.4	224
250		420	400	250	315	460	920	380	375	475	45	28	110	60	18×7	110	28×116.4	374

WPWDK 型

轴指向表示 SHAFT DIRECTION

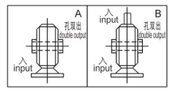

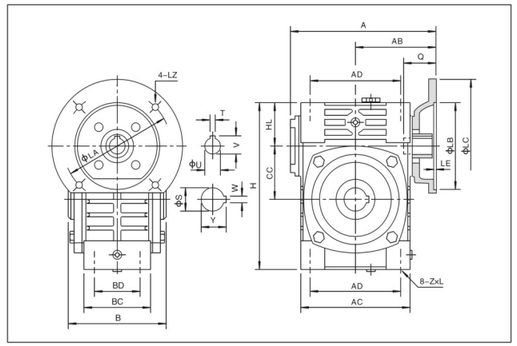

型号 size	入功率 input(kW)	传动比 ratio	A	AB	B	AC	BC	AD	BD	CC	HL	H	Z x L	电机法兰 flange LA	LB	LC	LE	LZ	入力孔 input hole Q	U	T×V	输出轴 outputshaft S	W×Y	重量 weight (kg)
40	0.12	10 15 20 25 30 40 50 60	127	72	85	95	61	78	42	40	35	125	M6×12	115	95	140	4	M8	31	11	4×12.8	16	5×18.3	4
50	0.18		151	83	105	111	68	85	50	50	35	150	M6×18	115	95	140	4	M8	31	11	4×12.8	20	6×22.8	7
60	0.37		167	91	110	127	76	105	55	60	42	177	M8×20	130	110	160	4	M8	33	14	5×16.3	25	8×28.3	10
70	0.37		204	110	130	152	86	125	65	70	55	215	M10×25	130	110	160	4	M8	40	14	5×16.3	30	8×33.3	14.5
	0.75		205	111										165	130	200		M10	42	19	6×21.8			
80	0.75		225	124	150	169	102	140	70	80	65	250	M12×28	165	130	200	4.5	M10	48	19	6×21.8	35	10×38.3	23
	1.5																		52	24	8×27.3			
100	1.5		284	156	160	216	117	180	90	100	80	310	M12×30	165	130	200	4.5	M10	52	24	8×27.3	40	12×43.3	36.5
120	2.2		327	179	175	256	124	220	100	120	95	370	M14×32	215	180	250	5	M12	63	28	8×31.3	45	14×48.8	54
	3.0																							
135	3.0		373	203	210	296	147	260	110	135	105	425	M16×35	215	180	250	5	M12	63	28	8×31.3	60	18×64.4	83
	4.0																							
155	4.0		426	226	256	345	185	280	120	155	103	461	M16×35	215	180	250	5	M12	63	28	8×31.3	70	20×74.9	110
	5.5		429	229										265	230	300			83	38	10×41.3			
175	5.5		466	248	282	374	192	320	140	175	123	521	M16×35	265	230	300	5	M12	83	38	10×41.3	80	22×85.4	156
	7.5																							
200	7.5		502	267	320	412	230	360	150	200	130	575	M20×36	265	230	300	5	M12	83	38	10×41.3	85	22×90.4	222
	11.0		525	290										300	250	350	6	M16	114	42	12×45.3			
250	11.0		613	332	400	500	285	420	190	250	150	700	M24×42	300	250	350	6	M16	114	42	12×45.3	110	28×116.4	376
	15.0																							

WPWDKA 型

WPWDKS 型

轴指向表示 SHAFT DIRECTION

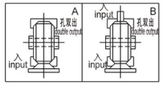

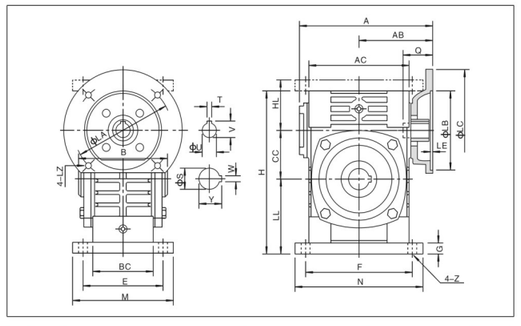

型号 size	入功率 input(kW)	传动比 ratio	A	AB	B	AC	BC	CC	HL	LL	H	M	N	E	F	G	Z	电机法兰 flange LA	LB	LC	LE	LZ	入力孔 input hole Q	U	T×V	输出轴 output shaft S	W×Y	重量 weight (kg)
40	0.12	10 15 20 25 30 40 50 60	127	72	85	95	61	40	45	60	135	100	130	80	110	10	10	115	95	140	4	M8	31	11	4×12.8	16	5×18.3	5
50	0.18		151	83	105	111	68	50	50	80	165	120	140	95	110	15	12	115	95	140	4	M8	31	11	4×12.8	20	6×22.8	8
60	0.37		167	91	110	127	76	60	60	93	195	130	150	105	120	18	12	130	110	160	4	M8	33	14	5×16.3	25	8×28.3	12.5
70	0.37		204	110	130	152	86	70	73	108	233	150	190	115	150	18	15	130	110	160	4	M8	40	14	5×16.3	30	8×33.3	17
	0.75		205	111														165	130	200		M10	42	19	6×21.8			
80	0.75		225	124	150	169	102	80	83	123	268	170	220	135	180	18	15	165	130	200	4.5	M10	48	19	6×21.8	35	10×38.3	26
	1.5																						52	24	8×27.3			
100	1.5		284	156	160	216	117	100	100	150	330	190	270	155	220	20	15	165	130	200	4.5	M10	52	24	8×27.3	40	12×43.3	41.5
120	2.2		327	179	175	256	124	120	120	180	395	230	320	180	260	25	18	215	180	250	5	M12	63	28	8×31.3	45	14×48.8	60
	3.0																											
135	3.0		373	203	210	296	147	135	135	215	455	250	350	200	290	30	18	215	180	250	5	M12	63	28	8×31.3	60	18×64.4	90
	4.0																											
155	4.0		426	226	256	345	185	155	135	235	493	280	380	220	320	32	21	215	180	250	5	M12	63	28	8×31.3	70	20×74.9	118
	5.5		429	229														265	230	300			83	38	10×41.3			
175	5.5		466	248	282	374	192	175	160	260	558	310	410	250	350	37	21	265	230	300	5	M12	83	38	10×41.3	80	22×85.4	167
	7.5																											
200	7.5		502	267	320	412	230	200	175	290	620	355	445	290	390	45	24	265	230	300	5	M12	83	38	10×41.3	85	22×90.4	237
	11.0		525	290														300	250	350	6	M16	114	42	12×45.3			
250	11.0		613	332	400	500	285	250	200	350	750	460	560	380	480	50	28	300	250	350	6	M16	114	42	12×45.3	110	28×116.4	395
	15.0																											

WPWDKO 型

轴指向表示 SHAFT DIRECTION

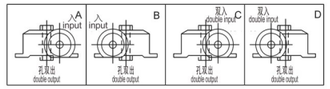

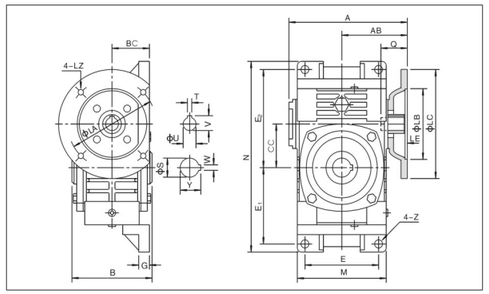

型号 size	入功率 input(kW)	传动比 ratio	A	AB	B	BC	CC	M	N	E	E_1	E_2	G	Z	电机法兰 flange LA	LB	LC	LE	LZ	入力孔 input hole Q	U	T×V	输出轴 output shaft S	W×Y	重量 weight (kg)
40	0.12	10 15 20 25 30 40 50 60	127	72	85	45	40	95	187	70	72	97	12	10	115	95	140	4	M8	31	11	4×12.8	16	5 x 18.3	5.4
50	0.18		151	83	105	50	50	111	226	90	90	110	14	12	115	95	140	4	M8	31	11	4×12.8	20	6 x 22.8	8.5
60	0.37		167	91	110	55	60	127	257	100	102	129	15	12	130	110	160	4	M8	33	14	5×16.3	25	8 x 28.3	12
70	0.37		204	110	130	65	70	152	305	120	120	155	20	15	130	110	160	4	M8	40	14	5×16.3	30	8 x 33.3	17
	0.75		205	111											165	130	200		M10	42	19	6×21.8			
80	0.75		225	124	150	70	80	174	350	140	140	180	20	15	165	130	200	4.5	M10	48	19	6×21.8	35	10 x 38.3	26
	1.5																			52	24	8×27.3			
100	1.5		284	156	160	90	100	224	410	190	165	215	22	15	165	130	200	4.5	M10	52	24	8×27.3	40	12 x 43.3	40.5
120	2.2		327	179	175	100	120	264	494	220	195	255	25	18	215	180	250	5	M12	63	28	8×31.3	45	14 x 48.8	59
	3.0																								
135	3.0		373	203	210	110	135	304	559	260	230	285	30	18	215	180	250	5	M12	63	28	8×31.3	60	18 x 64.4	89
	4.0																								
155	4.0		426	226	256	140	155	345	605	290	250	305	35	21	215	180	250	5	M12	63	28	8×31.3	70	20 x 74.9	138
	5.5		429	229											265	230	300			83	38	10×41.3			
175	5.5		466	248	282	150	175	374	675	320	273	348	40	21	265	230	300	5	M12	83	38	10×41.3	80	22 x 85.4	172
	7.5																								
200	7.5		502	267	320	175	200	424	749	370	305	390	40	24	265	230	300	5	M12	83	38	10×41.3	85	22 x 90.4	246
	11.0		525	290											300	250	350	6	M16	114	42	12×45.3			
250	11.0		613	332	400	200	250	510	920	440	375	475	45	28	300	250	350	6	M16	114	42	12×45.3	110	28 x 116.4	410
	15.0																								

WPWDKT 型

WPWDKV 型

WPWDKT 轴指向表示 SHAFT DIRECTION

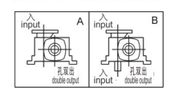

WPWDKV 轴指向表示 SHAFT DIRECTION

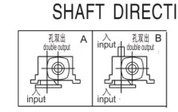

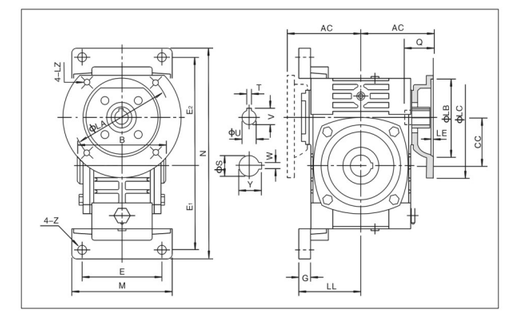

型号 size	入功率 input(kW)	传动比 ratio	AC	B	CC	LL	M	N	E	E_1	E_2	G	Z	电机法兰 flange LA	LB	LC	LE	LZ	入力孔 input hole Q	U	T×V	输出轴 output shaft S	W×Y	重量 weight (kg)
40	0.12	10 15 20 25 30 40 50 60	72	85	40	63	90	187	70	72	97	12	10	115	95	140	4	M8	31	11	4×12.8	16	5 x 18.3	5.4
50	0.18		83	105	50	70	120	226	95	90	110	14	12	115	95	140	4	M8	31	11	4×12.8	20	6 x 22.8	8.5
60	0.37		91	110	60	80	130	257	105	102	129	15	12	130	110	160	4	M8	33	14	5×16.3	25	8 x 28.3	12
70	0.37		110	130	70	95	150	305	115	120	155	20	15	130	110	160	4	M8	40	14	5×16.3	30	8 x 33.3	17
	0.75		111											165	130	200		M10	42	19	6×21.8			
80	0.75		124	150	80	105	170	350	135	140	180	20	15	165	130	200	4.5	M10	48	19	6×21.8	35	10 x 38.3	26
	1.5																		52	24	8×27.3			
100	1.5		156	160	100	135	190	410	155	165	215	22	15	165	130	200	4.5	M10	52	24	8×27.3	40	12 x 43.3	40.5
120	2.2		179	175	120	160	230	494	180	195	255	25	18	215	180	250	5	M12	63	28	8×31.3	45	14 x 48.8	59
	3.0																							
135	3.0		203	210	135	185	250	559	200	230	285	30	18	215	180	250	5	M12	63	28	8×31.3	60	18 x 64.4	89
	4.0																							
155	4.0		226	256	155	220	275	605	220	250	305	35	21	215	180	250	5	M12	63	28	8×31.3	70	20 x 74.9	138
	5.5		229											265	230	300			83	38	10×41.3			
175	5.5		248	282	175	240	310	675	250	273	348	40	21	265	230	300	5	M12	83	38	10×41.3	80	22 x 85.4	172
	7.5																							
200	7.5		267	320	200	280	360	749	290	305	390	40	24	265	230	300	5	M12	83	38	10×41.3	85	22 x 90.4	246
	11.0		290											300	250	350	6	M16	114	42	12×45.3			
250	11.0		332	400	250	315	460	920	380	375	475	45	28	300	250	350	6	M16	114	42	12×45.3	110	28 x 116.4	410
	15.0																							

WPWE 型

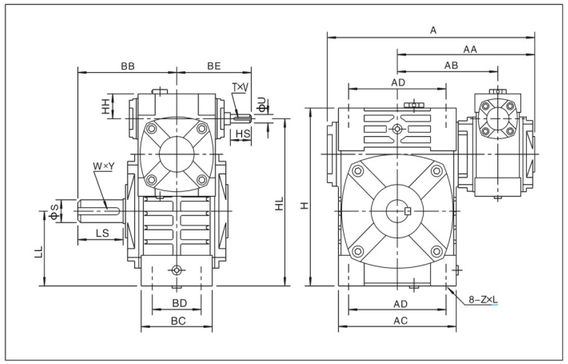

轴指向表示 SHAFT DIRECTION

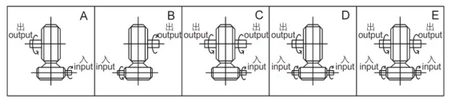

型号 size	传动比 ratio	A	AA	AB	BB	BE	AC	BC	AD	BD	HH	HL	LL	H	Z x L	输入轴 input shaft			输出轴 output shaft			重量 weight (kg)
																HS	U	T x V	LS	S	W x Y	
40/70	200 300 400 500 600 800 900	261	167	126	131	87	152	86	125	65	35	200	90	215	M10×25	25	12	4 x 2.5	60	28	8 x 4	17
50/80		290	190	136	142	108	169	102	140	70	35	235	105	250	M12×28	30	12	4 x 2.5	65	32	10 x 5	28
60/100		347	220	166	169	120	216	117	180	90	42	290	130	310	M12×30	40	15	5 x 3	75	38	10 x 5	43
70/120		403	255	193	190	140	256	124	220	100	55	345	155	370	M14×32	40	18	6 x 3.5	85	45	14 x 5.5	64
80/135		466	296	225	210	160	296	147	260	110	65	400	185	425	M16×35	50	22	6 x 3.5	95	55	16 x 6	99
100/155		541	341	259	252	190	345	185	280	120	80	458	203	461	M16×35	50	25	8 x 4	110	60	18 x 7	136
120/175		577	378	288	255	219	374	192	320	140	95	518	223	521	M16×35	65	30	8 x 4	110	65	18 x 7	193
135/200		639	421	320	294	249	412	230	360	150	105	580	245	575	M20×36	75	35	10 x 5	125	70	20 x 7.5	280
155/250		804	523	394	360	295	500	285	420	190	103	705	300	700	M24×42	85	40	12 x 5	155	90	25 x 9	442

WPEA 型

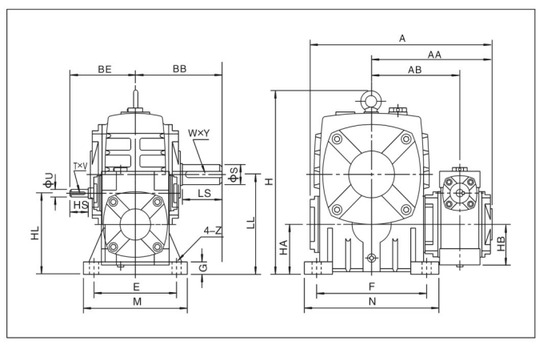

轴指向表示 SHAFT DIRECTION

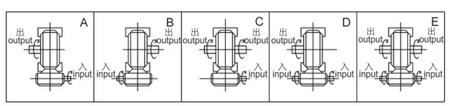

型号 size	传动比 ratio	A	AA	AB	BB	BE	HL	LL	H	HA	HB	M	N	E	F	G	Z	输入轴 input shaft			输出轴 output shaft			重量 weight (kg)
																		HS	U	T x V	LS	S	W x Y	
40/70	200 300 400 500 600 800 900	261	167	126	131	87	110	140	228	70	50	150	190	115	150	20	15	25	12	4 x 2.5	60	28	8 x 4	20
50/80		290	190	136	142	108	130	160	255	80	65	170	220	135	180	20	15	30	12	4 x 2.5	65	32	10 x 5	27
60/100		347	220	166	169	120	160	200	315	100	75	190	270	155	220	25	15	40	15	5 x 3	75	38	10 x 5	44
70/120		403	255	193	190	140	190	240	425	120	90	230	320	180	260	30	18	40	18	6 x 3.5	85	45	14 x 5.5	73
80/135		466	296	225	210	160	215	270	480	135	105	250	350	200	290	30	18	50	22	6 x 3.5	95	55	16 x 6	101
80/147		472	299	228	210	160	203	270	475	123	105	250	350	200	280	32	18	50	22	6 x 3.5	95	55	16 x 6	112
100/155		541	341	259	252	190	235	290	530	135	130	275	390	220	320	35	21	50	25	8 x 4	110	60	18 x 7	144
120/175		577	378	288	255	219	280	335	605	160	155	310	430	250	350	40	21	65	30	8 x 4	110	65	18 x 7	201
135/200		639	421	320	294	249	310	375	665	175	185	360	480	290	390	40	24	75	35	10 x 5	125	70	20 x 7.5	293
155/250		804	523	394	360	295	355	450	790	200	203	460	560	380	480	45	28	85	40	12 x 5	155	90	25 x 9	462

WPES 型

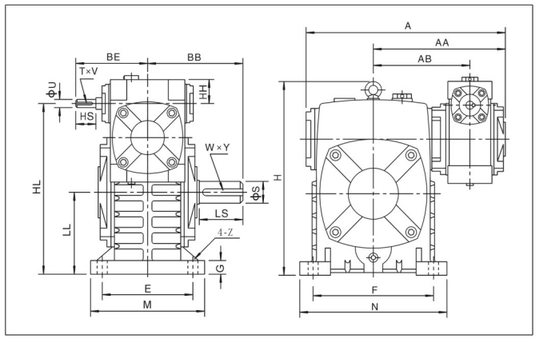

轴指向表示 SHAFT DIRECTION

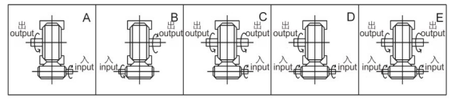

型号 size	传动比 ratio	A	AA	AB	BB	BE	HH	HL	LL	H	M	N	E	F	G	Z	输入轴 input shaft			输出轴 output shaft			重量 weight (kg)
																	HS	U	T x V	LS	S	W x Y	
40/70	200 300 400 500 600 800 900	261	167	126	131	87	35	215	105	225	150	190	115	150	20	15	25	12	4 x 2.5	60	28	8 x 4	20
50/80		290	190	136	142	108	35	250	120	265	170	220	135	180	20	15	30	12	4 x 2.5	65	32	10 x 5	27
60/100		347	220	166	169	120	42	310	150	315	190	270	155	220	25	15	40	15	5 x 3	75	38	10 x 5	44
70/120		403	255	193	190	140	55	370	180	415	230	320	180	260	30	18	40	18	6 x 3.5	85	45	14 x 5.5	73
80/135		466	296	225	210	160	65	430	215	480	250	350	200	290	30	18	50	22	6 x 3.5	95	55	16 x 6	101
80/147		472	299	228	212	160	65	430	203	485	250	350	200	280	32	18	50	22	6 x 3.5	95	55	16 x 6	112
100/155		541	341	259	252	190	80	490	235	540	275	390	220	320	35	21	50	25	8 x 4	110	60	18 x 7	144
120/175		577	378	288	255	219	95	555	260	600	310	430	250	350	40	21	65	30	8 x 4	110	65	18 x 7	201
135/200		639	421	320	294	249	105	625	290	675	360	480	290	390	40	24	75	35	10 x 5	125	70	20 x 7.5	293
155/250		804	523	394	360	295	103	755	350	820	460	560	380	480	45	28	85	40	12 x 5	155	90	25 x 9	462

WPEX 型

WPEX 轴指向表示
SHAFT DIRECTION

WPEO 型

WPEO 轴指向表示
SHAFT DIRECTION

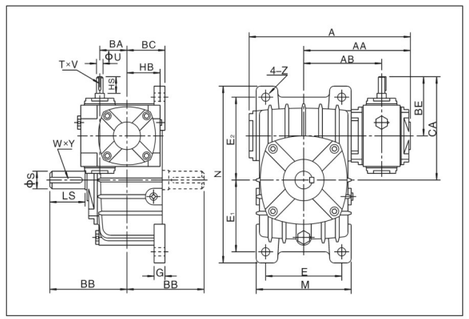

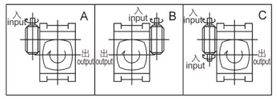

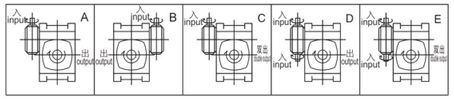

型号 size	传动比 ratio	A	AA	AB	BA	BB	BC	BE	HB	CA	M	N	E	E_1	E_2	G	Z	输入轴 input shaft			输出轴 output shaft			重量 weight (kg)
																		HS	U	T x V	LS	S	W x Y	
40/70	200 300 400 500 600 800 900	261	167	126	40	131	65	87	50	157	156	295	120	120	135	20	15	25	12	4 x 2.5	60	28	8 x 4	19
50/80		290	190	136	50	142	70	108	65	188	175	320	140	130	150	20	15	30	12	4 x 2.5	65	32	10 x 5	27
60/100		347	220	166	60	169	90	120	75	222	224	375	190	155	180	25	15	40	15	5 x 3	75	38	10 x 5	44
70/120		403	255	193	70	190	100	140	90	260	266	450	220	185	215	30	18	40	18	6 x 3.5	85	45	14 x 5.5	63
80/135		466	296	225	80	210	110	160	105	295	306	495	260	210	235	30	18	50	22	6 x 3.5	95	55	16 x 6	96
80/147		472	299	228	80	210	113	160	105	307	302	558	250	254	254	32	18	50	22	6 x 3.5	95	55	16 x 6	112
100/155		541	341	259	100	252	140	190	130	345	350	590	290	245	295	35	21	50	25	8 x 4	110	60	18 x 7	149
120/175		577	378	288	120	255	150	219	155	394	394	640	320	267	323	40	21	65	30	8 x 4	110	65	18 x 7	191
135/200		639	421	320	135	294	175	249	185	449	440	710	370	290	360	40	24	75	35	10 x 5	125	70	20 x 7.5	278
155/250		804	523	394	155	360	200	295	203	545	510	860	440	350	440	45	28	85	40	12 x 5	155	90	25 x 9	442

WPWED 型

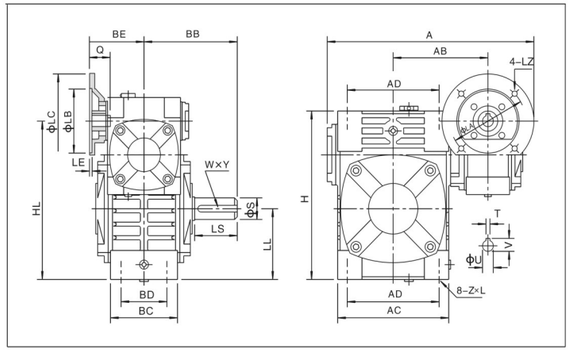

轴指向表示 SHAFT DIRECTION

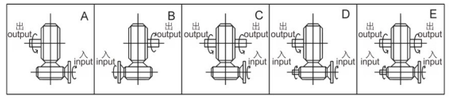

型号 size	入功率 input(kW)	传动比 ratio	A	AB	BB	BE	AC	BC	AD	BD	HL	LL	H	Z×L	电机法兰 flange LA	LB	LC	LE	LZ	入力孔 input hole Q	U	T×V	输出轴output shaft LS	S	W×Y	重量 weight (kg)
40/70	0.12	200	290	126	131	72	152	86	125	65	200	90	215	M10×25	115	95	140	4	M8	31	11	4×12.8	60	28	8×4	17
50/80	0.18	300	306	136	142	83	169	102	140	70	235	105	250	M12×28	115	95	140	4	M8	31	11	4×12.8	65	32	10×5	28
60/100	0.37	400	373	166	169	91	216	117	180	90	290	130	310	M12×30	130	110	160	4	M8	33	14	5×16.3	75	38	10×5	44
70/120	0.37	500	421	193	190	110	256	124	220	100	345	155	370	M14×32	130	110	160	4	M8	40	14	5×16.3	85	45	14×5.5	66
	0.75	600	441			111									165	130	200		M10	42	19	6×21.8				
80/135	0.75	800	495	225	210	124	296	147	260	110	400	185	425	M16×35	165	130	200	4.5	M10	48	19	6×21.8	95	55	16×6	101
	1.5	900																		52	24	8×27.3				
100/155	1.5		559	259	252	156	345	185	280	120	458	203	461	M16×35	165	130	200	4.5	M10	52	24	8×27.3	110	60	18×7	139
120/175	2.2		631	288	255	179	374	192	320	140	518	223	521	M16×35	215	180	250	5	M12	63	28	8×31.3	110	65	18×7	196
	3.0																									
135/200	3.0		680	320	294	203	412	230	360	150	580	245	575	M20×36	215	180	250	5	M12	63	28	8×31.3	125	70	20×7.5	285
	4.0																									
155/250	4.0		800	394	360	226	500	285	420	190	705	300	700	M24×42	215	180	250	5	M12	63	28	8×31.3	155	90	25×9	450
	5.0		825			229									265	230	300			83	38	10×41.3				

WPEDA 型

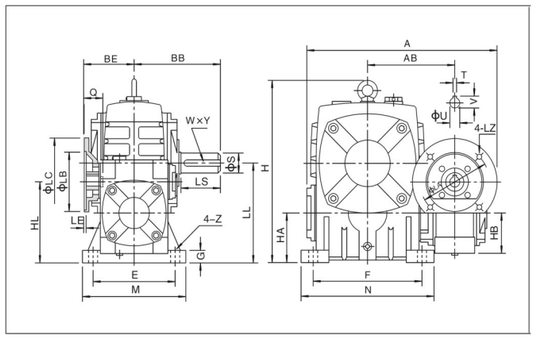

轴指向表示 SHAFT DIRECTION

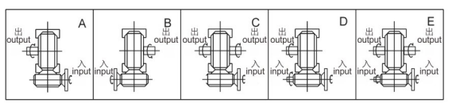

型号 size	入功率 input(kW)	传动比 ratio	A	AB	BB	BE	HL	LL	H	HA	HB	M	N	E	F	G	Z	电机法兰 flange LA	LB	LC	LE	LZ	入力孔 input hole Q	U	T×V	输出轴output shaft LS	S	W×Y	重量 weight (kg)
40/70	0.12	200	290	126	131	72	110	140	228	70	50	150	190	115	150	20	15	115	95	140	4	M8	31	11	4×12.8	60	28	8×4	19
50/80	0.18	300	306	136	142	83	130	160	255	80	65	170	220	135	180	20	15	115	95	140	4	M8	31	11	4×12.8	65	32	10×5	27
60/100	0.37	400	373	166	169	91	160	200	315	100	75	190	270	155	220	25	15	130	110	160	4	M8	33	14	5×16.3	75	38	10×5	45
70/120	0.37	500	421	193	190	110	190	240	425	120	90	230	320	180	260	30	18	130	110	160	4	M8	40	14	5×16.3	85	45	14×5.5	75
	0.75	600	441			111												165	130	200		M10	42	19	6×21.8				
80/135	0.75	800	495	225	210	124	215	270	480	135	105	250	350	200	290	30	18	165	130	200	4.5	M10	48	19	6×21.8	95	55	16×6	103
	1.5	900																					52	24	8×27.3				
80/147	0.75		501	228	210	124	203	270	475	123	105	250	350	200	280	32	18	165	130	200	4.5	M10	48	19	6×21.8	95	55	16×6	114
	1.5																						52	24	8×27.3				
100/155	1.5		559	259	252	156	235	290	530	135	130	275	390	220	320	35	21	165	130	200	4.5	M10	52	24	8×27.3	110	60	18×7	147
120/175	2.2		631	288	255	179	280	335	605	160	155	310	430	250	350	40	21	215	180	250	5	M12	63	28	8×31.3	110	65	18×7	204
	3.0																												
135/200	3.0		680	320	294	203	310	375	665	175	185	360	480	290	390	40	24	215	180	250	5	M12	63	28	8×31.3	125	70	20×7.5	298
	4.0																												
155/250	4.0		800	394	360	226	355	450	790	200	203	460	560	380	480	45	28	215	180	250	5	M12	63	28	8×31.3	155	90	25×9	470
	5.0		825			229												265	230	300			83	38	10×41.3				

WPEDS 型

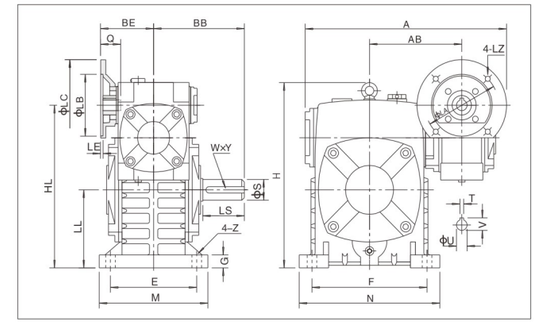

轴指向表示 SHAFT DIRECTION

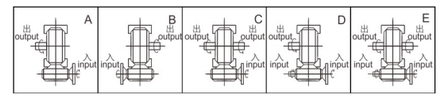

型号 size	入功率 input(kW)	传动比 ratio	A	AB	BB	BE	HL	LL	H	M	N	E	F	G	Z	电机法兰 flange LA	LB	LC	LE	LZ	入力孔 input hole Q	U	T×V	输出轴output shaft LS	S	W×Y	重量 weight (kg)
40/70	0.12	200	290	126	131	72	215	105	225	150	190	115	150	20	15	115	95	140	4	M8	31	11	4×12.8	60	28	8×4	19
50/80	0.18	300	306	136	142	83	250	120	265	170	220	135	180	20	15	115	95	140	4	M8	31	11	4×12.8	65	32	10×5	27
60/100	0.37	400	373	166	169	91	310	150	315	190	270	155	220	25	15	130	110	160	4	M8	33	14	5×16.3	75	38	10×5	45
70/120	0.37	500	421	193	190	110	370	180	415	230	320	180	260	30	18	130	110	160	4	M8	40	14	5×16.3	85	45	14×5.5	75
	0.75	600	441			111										165	130	200		M10	42	19	6×21.8				
80/135	0.75	800	495	225	210	124	430	215	480	250	350	200	290	30	18	165	130	200	4.5	M10	48	19	6×21.8	95	55	16×6	103
	1.5	900																			52	24	8×27.3				
80/147	0.75		501	228	210	124	430	203	485	250	350	200	280	32	18	165	130	200	4.5	M10	48	19	6×21.8	95	55	16×6	114
	1.5																				52	24	8×27.3				
100/155	1.5		559	259	252	156	490	235	540	275	390	220	320	35	21	165	130	200	4.5	M10	52	24	8×27.3	110	60	18×7	147
120/175	2.2		631	288	255	179	555	260	600	310	430	250	350	40	21	215	180	250	5	M12	63	28	8×31.3	110	65	18×7	204
	3.0																										
135/200	3.0		680	320	294	203	625	290	675	360	480	290	390	40	24	215	180	250	5	M12	63	28	8×31.3	125	70	20×7.5	298
	4.0																										
155/250	4.0		800	394	360	226	755	350	820	460	560	380	480	45	28	215	180	250	5	M12	63	28	8×31.3	155	90	25×9	470
	5.5		825			229										265	230	300			83	38	10×41.3				

WPEDX 型

WPEDX 轴指向表示
SHAFT DIRECTION

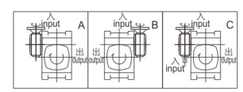

WPEDO 型

WPEDO 轴指向表示
SHAFT DIRECTION

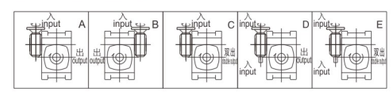

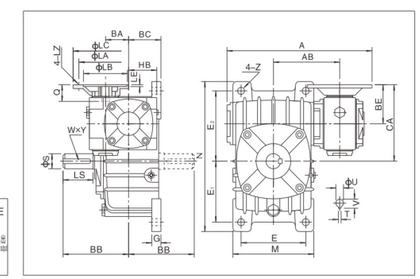

型号 size	入功率 input(kW)	传动比 ratio	A	AB	BA	BB	BC	BE	HB	CA	M	N	E	E_1	E_2	G	Z	电机法兰 flange LA	LB	LC	LE	LZ	入力孔 input hole Q	U	T×V	输出轴 output shaft LS	S	W×Y	重量 weight (kg)
40/70	0.12	200	290	126	40	131	65	72	50	142	156	295	120	120	135	20	15	115	95	140	4	M8	31	11	4×12.8	60	28	8×4	19
50/80	0.18	300	306	136	50	142	70	83	65	163	175	320	140	130	150	20	15	115	95	140	4	M8	31	11	4×12.8	65	32	10×5	27
60/100	0.37	400	373	166	60	169	90	91	75	191	224	375	190	155	180	25	15	130	110	160	4	M8	33	14	5×16.3	75	38	10×5	45
70/120	0.37	500	421	193	70	190	100	110	90	230	266	450	220	185	215	30	18	130	110	160	4	M8	40	14	5×16.3	85	45	14×5.5	65
	0.75	600	441					111		231								165	130	200		M10	42	19	6×21.8				
80/135	0.75	800	495	225	80	210	110	124	105	259	306	495	260	210	235	30	18	165	130	200	4.5	M10	48	19	6×21.8	95	55	16×6	98
	1.5	900																					52	24	8×27.3				
80/147	0.75		501	228	80	210	113	124	105	271	302	558	250	254	254	32	18	165	130	200	4.5	M10	48	19	6×21.8	95	55	16×6	114
	1.5																						52	24	8×27.3				
100/155	1.5		559	259	100	252	140	156	130	311	350	590	290	245	295	35	21	165	130	200	4.5	M10	52	24	8×27.3	110	60	18×7	152
120/175	2.2		631	288	120	255	150	179	155	354	394	640	320	267	323	40	21	215	180	250	5	M12	63	28	8×31.3	110	65	18×7	194
	3.0																												
135/200	3.0		680	320	135	294	175	203	185	403	440	710	370	290	360	40	24	215	180	250	5	M12	63	28	8×31.3	125	70	20×7.5	283
	4.0																												
155/250	4.0		800	394	155	360	200	226	203	476	510	860	440	350	440	45	28	215	180	250	5	M12	63	28	8×31.3	155	90	25×9	450
	5.5		825					229		479								265	230	300			83	38	10×41.3				

WPWEK 型

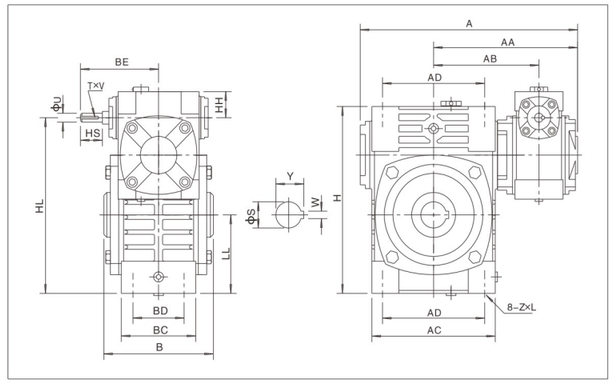

轴指向表示 SHAFT DIRECTION

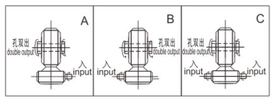

型号 size	传动比 ratio	A	AA	AB	B	BE	AC	BC	AD	BD	HH	HL	LL	H	Z×L	输入轴 input shaft			输出轴 output shaft		重量 weight (kg)
																HS	U	T×V	S	W×Y	
40/70	200 300 400 500 600 800 900	261	167	126	130	87	152	86	125	65	35	200	90	215	M10×25	25	12	4×2.5	30	8×33.3	17
50/80		290	190	136	150	108	169	102	140	70	35	235	105	250	M12×28	30	12	4×2.5	35	10×38.3	28
60/100		347	220	166	160	120	216	117	180	90	42	290	130	310	M12×30	40	15	5×3	40	12×43.3	43
70/120		403	255	193	175	140	256	124	220	100	55	345	155	370	M14×32	40	18	6×3.5	45	14×48.8	64
80/135		466	296	225	210	160	296	147	260	110	65	400	185	425	M16×35	50	22	6×3.5	60	18×64.4	99
100/155		541	341	259	256	190	345	185	280	120	80	458	203	461	M16×35	50	25	8×4	70	20×74.9	136
120/175		577	378	288	282	219	374	192	320	140	95	518	223	521	M16×35	65	30	8×4	80	22×85.4	193
135/200		639	421	320	320	249	412	230	360	150	105	580	245	575	M20×36	75	35	10×5	85	22×90.4	280
155/250		804	523	394	400	295	500	285	420	190	103	705	300	700	M24×42	85	40	12×5	110	28×116.4	442

WPEKA 型

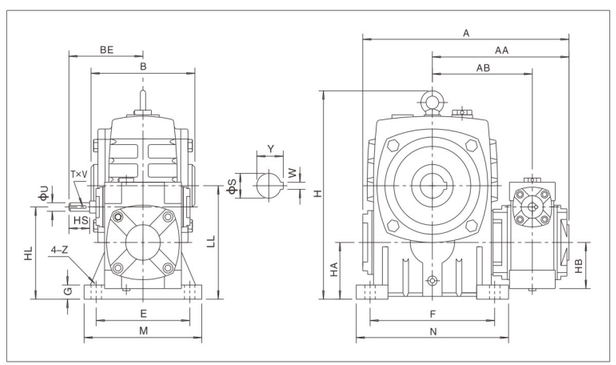

轴指向表示 SHAFT DIRECTION

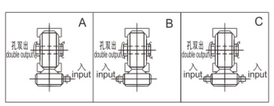

型号 size	传动比 ratio	A	AA	AB	B	BE	HL	LL	H	HA	HB	M	N	E	F	G	Z	输入轴 input shaft			输出轴 output shaft		重量 weight (kg)
																		HS	U	T×V	S	W×Y	
40/70	200 300 400 500 600 800 900	261	167	126	130	87	110	140	228	70	50	150	190	115	150	20	15	25	12	4×2.5	30	8×33.3	20
50/80		290	190	136	150	108	130	160	255	80	65	170	220	135	180	20	15	30	12	4×2.5	35	10×38.3	27
60/100		347	220	166	160	120	160	200	315	100	75	190	270	155	220	25	15	40	15	5×3	40	12×43.3	44
70/120		403	255	193	175	140	190	240	425	120	90	230	320	180	260	30	18	40	18	6×3.5	45	14×48.8	73
80/135		466	296	225	210	160	215	270	480	135	105	250	350	200	290	30	18	50	22	6×3.5	60	18×64.4	101
100/155		541	341	259	256	190	235	290	530	135	130	275	390	220	320	35	21	50	25	8×4	70	20×74.9	144
120/175		577	378	288	282	219	280	335	605	160	155	310	430	250	350	40	21	65	30	8×4	80	22×85.4	201
135/200		639	421	320	320	249	310	375	665	175	185	360	480	290	390	40	24	75	35	10×5	85	22×90.4	293
155/250		804	523	394	400	295	355	450	790	200	203	460	560	380	480	45	28	85	40	12×5	110	28×116.4	462

WPEKS 型

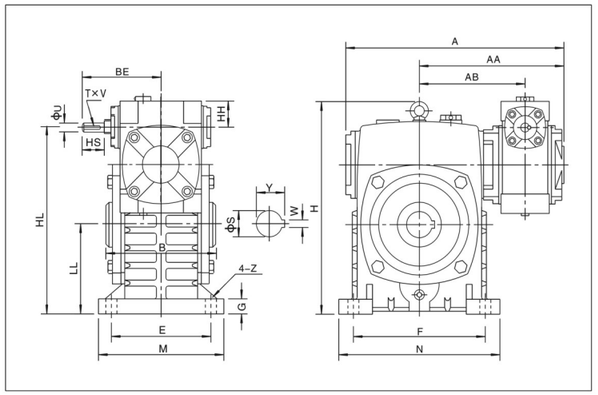

轴指向表示 SHAFT DIRECTION

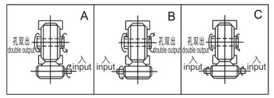

型号 size	传动比 ratio	A	AA	AB	B	BE	HH	HL	LL	H	M	N	E	F	G	Z	输入轴 input shaft			输出轴 output shaft		重量 weight (kg)
																	HS	U	T×V	S	W×Y	
40–70	200 300 400 500 600 800 900	261	167	126	130	87	35	215	105	225	150	190	115	150	20	15	25	12	4×2.5	30	8×33.3	20
50–80		290	190	136	150	108	35	250	120	265	170	220	135	180	20	15	30	12	4×2.5	35	10×38.3	27
60–100		347	220	166	160	120	42	310	150	315	190	270	155	220	25	15	40	15	5×3	40	12×43.3	44
70–120		403	255	193	175	140	55	370	180	415	230	320	180	260	30	18	40	18	6×3.5	45	14×48.8	73
80–135		466	296	225	210	160	65	430	215	480	250	350	200	290	30	18	50	22	6×3.5	60	18×64.4	101
100–155		541	341	259	256	190	80	490	235	540	275	390	220	320	35	21	50	25	8×4	70	20×74.9	144
120–175		577	378	288	282	219	95	555	260	600	310	430	250	350	40	21	65	30	8×4	80	22×85.4	201
135–200		639	421	320	320	249	105	625	290	675	360	480	290	390	40	24	75	35	10×5	85	22×90.4	293
155–250		804	523	394	400	295	103	755	350	820	460	560	380	480	45	28	85	40	12×5	110	28×116.4	462

WPWEKO 型

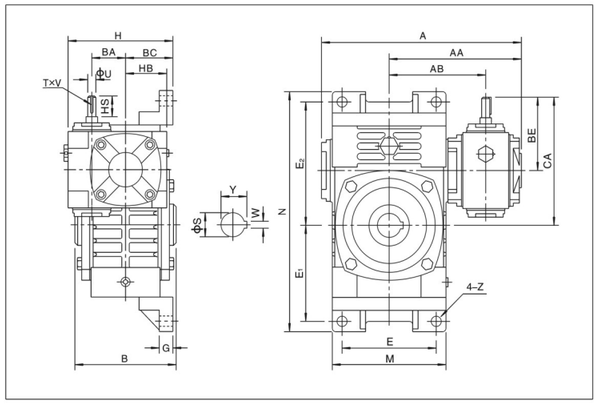

轴指向表示 SHAFT DIRECTION

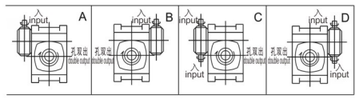

型号 size	传动比 ratio	A	AA	AB	B	BA	BC	BE	HB	CA	H	M	N	E	E_1	E_2	G	Z	输入轴 input shaft			输出轴 output shaft		重量 weight (kg)
																			HS	U	T×V	S	W×Y	
40/70	200 300 400 500 600 800 900	261	167	126	130	40	65	87	50	157	140	152	305	120	120	155	20	15	25	12	4×2.5	30	8×33.3	19.5
50/80		290	190	136	150	50	70	108	65	188	155	174	350	140	140	180	20	15	30	12	4×2.5	35	10×38.3	30.5
60/100		347	220	166	160	60	90	120	75	222	192	224	410	190	165	215	22	15	40	15	5×3	40	12×43.3	47
70/120		403	255	193	175	70	100	140	90	260	225	264	494	220	195	255	25	18	40	18	6×3.5	45	14×48.8	69
80/135		466	296	225	210	80	110	160	105	295	255	304	559	260	230	285	30	18	50	22	6×3.5	60	18×64.4	105
100/155		541	341	259	256	100	140	190	130	345	320	345	605	290	250	305	35	21	50	25	8×4	70	20×74.9	163
120/175		577	378	288	282	120	150	219	155	394	365	374	675	320	273	348	40	21	65	30	8×4	80	22×85.4	208
135/200		639	421	320	320	135	175	249	185	449	415	424	749	370	305	390	40	24	75	35	10×5	85	22×90.4	302
155/250		804	523	394	400	155	200	295	203	545	458	510	920	440	375	475	45	28	85	40	12×5	110	28×116.4	476

WPWEDK 型

轴指向表示
SHAFT DIRECTION

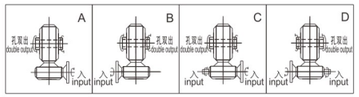

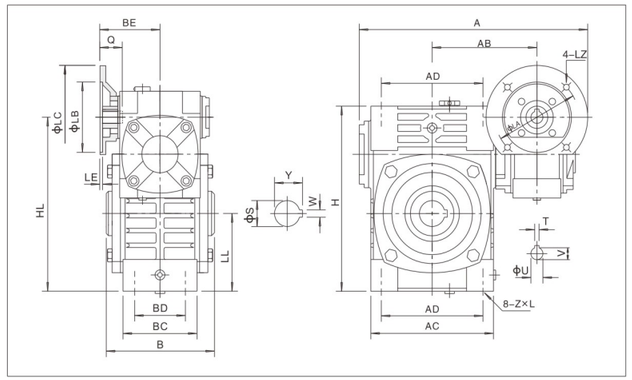

型号 size	入功率 input(kW)	传动比 ratio	A	AB	B	BE	AC	BC	AD	BD	HL	LL	H	Z×L	电机法兰 flange LA	LB	LC	LE	LZ	入力孔 input hole Q	U	T×V	输出轴 output shaft S	W×Y	重量 weight (kg)
40/70	0.12	200 300 400 500 600 800 900	290	126	130	72	152	86	125	65	200	90	215	M10×25	115	95	140	4	M8	31	11	4×12.8	30	8×33.3	17
50/80	0.18		306	136	150	83	169	102	140	70	235	105	250	M12×28	115	95	140	4	M8	31	11	4×12.8	35	10×38.3	28
60/100	0.37		373	166	160	91	216	117	180	90	290	130	310	M12×30	130	110	160	4	M8	33	14	5×16.3	40	12×43.3	44
70/120	0.37		421	193	175	110	256	124	220	100	345	155	370	M14×32	130	110	160	4	M8	40	14	5×16.3	45	14×48.8	66
	0.75		441			111									165	130	200		M10	42	19	6×21.8			
80/135	0.75		495	225	210	124	296	147	260	110	400	185	425	M16×35	165	130	200	4.5	M10	48	19	6×21.8	60	18×64.4	101
	1.5																			52	24	8×27.3			
100/155	1.5		559	259	256	156	345	185	280	120	458	203	461	M16×35	165	130	200	4.5	M10	52	24	8×27.3	70	20×74.9	139
120/175	2.2		631	288	282	179	374	192	320	140	518	223	521	M16×35	215	180	250	5	M12	63	28	8×31.3	80	22×85.4	196
	3																								
135/200	3		680	320	320	203	412	230	360	150	580	245	575	M20×36	215	180	250	5	M12	63	28	8×31.3	85	22×90.4	285
	4																								
155/250	4		800	394	400	226	500	285	420	190	705	300	700	M24×42	215	180	250	5	M12	63	28	8×31.3	110	28×116.4	450
	5		825			229									265	230	300			83	38	10×41.3			

WPEDKS 型

轴指向表示
SHAFT DIRECTION

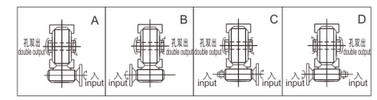

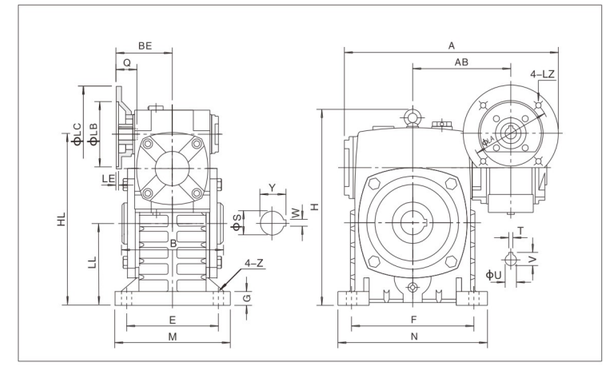

型号 size	入功率 input(kW)	传动比 ratio	A	AB	B	BE	HL	LL	H	M	N	E	F	G	Z	电机法兰 flange LA	LB	LC	LE	LZ	入力孔 input hole Q	U	T×V	输出轴 output shaft S	W×Y	重量 weight (kg)
40/70	0.12	200 300 400 500 600 800 900	290	126	130	72	215	105	225	150	190	115	150	20	15	115	95	140	4	M8	31	11	4×12.8	30	8×33.3	19
50/80	0.18		306	136	150	83	250	120	265	170	220	135	180	20	15	115	95	140	4	M8	31	11	4×12.8	35	10×38.3	27
60/100	0.37		373	166	160	91	310	150	315	190	270	155	220	25	15	130	110	160	4	M8	33	14	5×16.3	40	12×43.3	45
70/120	0.37		421	193	175	110	370	180	415	230	320	180	260	30	18	130	110	160	4	M8	40	14	5×16.3	45	14×48.8	75
	0.75		441			111										165	130	200		M10	42	19	6×21.8			
80/135	0.75		495	225	210	124	430	215	480	250	350	200	290	30	18	165	130	200	4.5	M10	48	19	6×21.8	60	18×64.4	103
	1.5																			52	24	8×27.3			
100/155	1.5		559	259	256	156	490	235	540	275	390	220	320	35	21	165	130	200	4.5	M10	52	24	8×27.3	70	20×74.9	147
120/175	2.2		631	288	282	179	555	260	600	310	430	250	350	40	21	215	180	250	5	M12	63	28	8×31.3	80	22×85.4	204
	3.0																								
135/200	3.0		680	320	320	203	625	290	675	360	480	290	390	40	24	215	180	250	5	M12	63	28	8×31.3	85	22×90.4	298
	4.0																								
155/250	4.0		800	394	400	226	755	350	820	460	560	380	480	45	28	215	180	250	5	M12	63	28	8×31.3	110	28×116.4	470
	5.5		825			229										265	230	300			83	38	10×41.3			

WPEDKA 型

轴指向表示
SHAFT DIRECTION

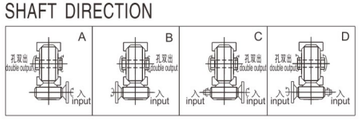

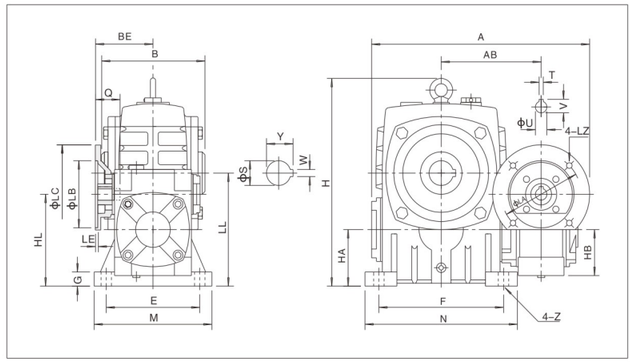

型号 size	入功率 input(kW)	传动比 ratio	A	AB	B	BE	HL	LL	H	HA	HB	M	N	E	F	G	Z	电机法兰 flange LA	LB	LC	LE	LZ	入力孔 input hole Q	U	T×V	输出轴 output shaft S	W×Y	重量 weight (kg)
40/70	0.12	200 300 400 500 600 800 900	290	126	130	72	110	140	228	70	50	150	190	115	150	20	15	115	95	140	4	M8	31	11	4×12.8	30	8×33.3	19
50/80	0.18		306	136	150	83	130	160	255	80	65	170	220	135	180	20	15	115	95	140	4	M8	31	11	4×12.8	35	10×38.3	27
60/100	0.37		373	166	160	91	160	200	315	100	75	190	270	155	220	25	15	130	110	160	4	M8	33	14	5×16.3	40	12×43.3	45
70/120	0.37		421	193	175	110	190	240	425	120	90	230	320	180	260	30	18	130	110	160	4	M8	40	14	5×16.3	45	14×48.8	75
	0.75		441			111												165	130	200		M10	42	19	6×21.8			
80/135	0.75		495	225	210	124	215	270	480	135	105	250	350	200	290	30	18	165	130	200	4.5	M10	48	19	6×21.8	60	18×64.4	103
	1.5																						52	24	8×27.3			
100/155	1.5		559	259	256	156	235	290	530	135	130	275	390	220	320	35	21	165	130	200	4.5	M10	52	24	8×27.3	70	20×74.9	147
120/175	2.2		631	288	282	179	280	335	605	160	155	310	430	250	350	40	21	215	180	250	5	M12	63	28	8×31.3	80	22×85.4	204
	3																											
135/200	3		680	320	320	203	310	375	665	175	185	360	480	290	390	40	24	215	180	250	5	M12	63	28	8×31.3	85	22×90.4	298
	4																											
155/250	4		800	394	400	226	355	450	790	200	203	460	560	380	480	45	28	215	180	250	5	M12	63	28	8×31.3	110	28×116.4	470
	5		825			229												265	230	300			83	38	10×41.3			

WPWEDKO 型

轴指向表示
SHAFT DIRECTION

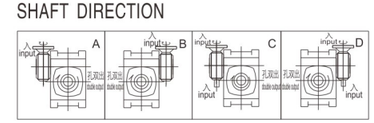

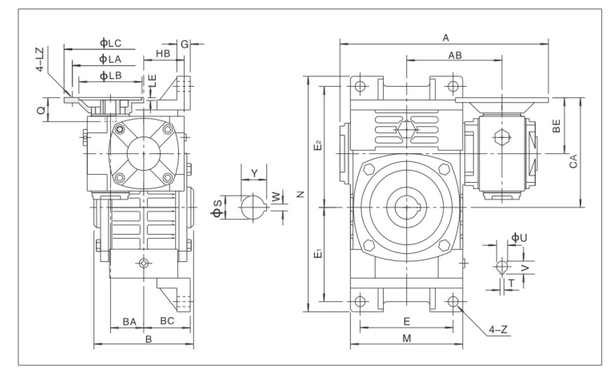

型号 size	入功率 input(kW)	传动比 ratio	A	AB	B	BA	BC	BE	HB	CA	M	N	E	E_1	E_2	G	Z	电机法兰 flange LA	LB	LC	LE	LZ	入力孔 input hole Q	U	T×V	输出轴 output shaft S	W×Y	重量 weight (kg)
40/70	0.12	200 300 400 500 600 800 900	290	126	130	40	65	72	50	142	152	305	120	120	155	20	15	115	95	140	4	M8	31	11	4×12.8	30	8×33.3	20
50/80	0.18		306	136	150	50	70	83	65	163	174	350	140	140	180	20	15	115	95	140	4	M8	31	11	4×12.8	35	10×38.3	31
60/100	0.37		373	166	160	60	90	91	75	191	224	410	190	165	215	22	15	130	110	160	4	M8	33	14	5×16.3	40	12×43.3	48
70/120	0.37		421	193	175	70	100	110	90	230	264	494	220	195	255	25	18	130	110	160	4	M8	40	14	5×16.3	45	14×48.8	71
	0.75		441					111		231								165	130	200		M10	42	19	6×21.8			
80/135	0.75		495	225	210	80	110	124	105	259	304	559	260	230	285	30	18	165	130	200	4.5	M10	48	19	6×21.8	60	18×64.4	107
	1.5																						52	24	8×27.3			
100/155	1.5		559	259	256	100	140	156	130	311	345	605	290	250	305	35	21	165	130	200	4.5	M10	52	24	8×27.3	70	20×74.9	166
120/175	2.2		631	288	282	120	150	179	155	354	374	675	320	273	348	40	21	215	180	250	5	M12	63	28	8×31.3	80	22×85.4	211
	3.0																											
135/200	3.0		680	320	320	135	175	203	185	403	424	749	370	305	390	40	24	215	180	250	5	M12	63	28	8×31.3	85	22×90.4	307
	4.0																											
155/250	4.0		800	394	400	155	200	226	203	476	510	920	440	375	475	45	28	215	180	250	5	M12	63	28	8×31.3	110	28×116.4	484
	5.5		825					229		479								265	230	300			83	38	10×41.3			

7. 使用说明
Operating Instructions

7.1 安装注意事项
Notices of installation

7.1.1 减速机须安装在平整坚固的底座上，底脚螺栓必须紧固、防震。
The base-plate must be plane and stoutness, and the base-bolts must be screwed down and shockproof.

7.1.2 原动机 –– 减速机 –– 工作机的各联接轴伸，安装后必须互相准确对准轴线。
The connecting shafts of prime mover, reducer and operation device must be coaxial after installation.

7.1.3 减速机输入端及输出端轴伸外径尺寸公差均按 h6 制作，与之相配的联轴器、皮带轮、链轮等传动件内孔须按合适的尺寸公差配制，避免装配过紧损坏轴承，装配过松影响正常动力传递。
The diameter tolerance zone of input and output shafts is h6, the holes of fittings (such as couplings, belt-pulley, sprocket wheel and so on)must properly mate the shaft, which prevents bearing from breakage because of over-tight mate or avoid effecting normal power transmission because of over-loose mate.

7.1.4 链轮、齿轮等传动件装上轴伸时，应尽量靠近轴承，以减少轴伸弯曲应力。
Drivers such as sprocket wheel and gear must be fitted close to bearings in order to reduce bending stress of hanging shaft.

7.1.5 WPD型减速机装配电机时，应在蜗杆头部内孔孔壁及键槽处涂抹黄油，避免装配过紧，防止轴孔日久生锈。
While assembling motor of WPD reducer, it is necessary that proper amount of butter applies to the worm shaft input hole and keyway, avoiding assembling too tightly and rusting after using for a long time.

7.1.6 订购使用各类 WPD 减速机时，若电机 重量偏大，应设支撑装置。
Supporting frame is required if the motor weight is bigger，When all types of WPD worm gearbox are used.

7.2 使用注意事项
Notices of usage

7.2.1 使用前应注意检查减速机型式结构、中心距规格、传动比、输入轴连接方式、输出轴结构、输入轴输出轴轴指向和回转方向等是否符合使用要求。
Before using,please check carefully whether the reducer model,distance,transmission ratio,input connecting method, output shaft structure,input and output shaft direction and revolving direction accord with requirement.

7.2.2 按照样本上“油品润滑”中所规定的要求，注入合适的品种牌号润滑油。加油后，旋紧顶部的通气器，拔掉通气器上之小锥塞，减速机方可开始运转，必须选用合适牌号的润滑油，必须控制适宜的加油量，必须按规定要求及时换油，尤其要重视首次使用 100 小时后的更换新油。
According to the requirement of " lubricant " in the product manual, please fill proper category and brand lub-ricant. And then screw on the vent-plug, uncork the small cone-plug of vent-plug. Only after doing these, reducer is ready for starting up running. The proper brand and adequate lubricant oil is required;replacing oil in time conforming to the request of product manual is also necessary, especially after using first 100 hours, it is required refilling new oil.

7.2.3 使用过程中发生不正常情况时，应及时停机检查，可参照“故障分析”表处理。(减速机的油温最高允许达到 95 ℃，在此温度界限下，只要油温不再上升，可以放心使用）。
When abnormal circumstances occur, please stop and check reducer per "Malfunctions Analysis"(allowable highest oil temperature is 95℃, under this temperature limit,if oil temperature no more goes up,please let reducer continue running).

8. 油品润滑
lubricant

蜗杆减速机使用前应注入 N220~N320 (环境温度 -30℃~40℃)或N320~N680(环境温度25℃~65℃)润滑油至油标中心点之上，并取掉通气器上之小锥塞。首次使用100小时后，洗净内部更换新油，以后每2500小时换油一次。
Before operation,input N220~N320(Ambient temperature -30℃~40℃)、N320~N680(Ambient temperature 25℃~65℃) lubrication oil up to the center line of the oil gauge. In the meanwhile, remove the small screw of the breather. After working for 100 hours in the first time, clear the inside and add new lubrication oil in it , then renew the lubricant oil per 2500 hours.

减速机在使用时，可按下表选用润滑油，加油量参照润滑油注油量表。
Lubricants for a reducer are optional in foreign as the below table. Adding oil according to capacity of lubrication oil.

Worm shaft speed (r/min)		Lubricant	Operating position Worm shaft,upper Worm shaft vertical	Operating position Worm shaft,lower Output shaft vertical
over	up to			
1000	3000	Synthetic oils	PG460 PAO460	PG220 PAO220
	1000			PG460 PAO460
2000	3000	Synthetic oils Mineral oils	PG460 PAO460 Mineral 460	PG220 PAO220 Mineral220
750	2000			PG320 PAO320 Mineral320
250	750			PG320 PAO320 Mineral460
	250		PG680 PAO680 Mineral 680	PG680 PAO680 Mineral680

周围温度 Ambient Temp	负荷 Load	ISO VG	GB3141-82	Shell	Mobil	TOTAL	HOIYKER
-30℃ ~ -10℃	普通 Commonly	VG 100	N100	Shell Omila S4WE150	SHC 627	CARTER SY 100	HOIYKER SHC 100
	重载 Heavy	VG 150	N150	Shell Omila S4WE150	SHC 629	CARTER SY 150	HOIYKER SHC 150
-10℃ ~ 10℃	普通 Commonly	VG 150	N150	Shell Omila S4WE150	SHC 629	CARTER SY 150	HOIYKER SHC 150
	重载 Heavy	VG 220	N220	Shell Omila S4WE220	SHC 630	CARTER SY 220	HOIYKER SHC 220
10℃ ~ 30℃	普通 Commonly	VG 220	N220	Shell Omila S4WE220	SHC 630	CARTER SY 220	HOIYKER SHC 220
	重载 Heavy	VG 320	N320	Shell Omila S4WE320	SHC 632	CARTER SY 320	HOIYKER SHC 320
10℃ ~ 40℃	普通 Commonly	VG 320	N320	Shell Omila S4WE320	SHC 632	CARTER SY 320	HOIYKER SHC 320
	重载 Heavy	VG 460	N460	Shell Omila S4WE460	SHC 634	CARTER SY 460	HOIYKER SHC 460
40℃ ~ 65℃	普通 Commonly	VG 460	N460	Shell Omila S4WE460	SHC 634	CARTER SY 460	HOIYKER SHC 460
	重载 Heavy	VG 680	N680	Shell Omila S4WE680	SHC 636	CARTER SY 680	HOIYKER SHC 680

9. 故障分析
Malfunctions Analysis

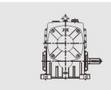

故障情况 Fault Description	故障原因 Reasons	解决办法 Solutions
过 热 Overheating	原动机、减速机、工作机连接不当 Improper connection among prime mover, reducer and the operation device	调整至适当位置，使三者相联轴线同轴 Adjust to proper position
	超负荷运转 Overloading	适当调整负荷 Adjust to proper load
	油封过度磨擦 Over friction of oil seals	在油封唇口处滴润滑油 Drop lubricant at oil seal
	润滑油过少或过多 Lubricant oil overmuch or shortage	按油标指示点调整油量 Adjust to proper oil quantity as indication
	润滑油杂质多或润滑性差 Much impurity in oil or inferior oil	更换合适新油 Refill proper oil
振 动 Vibration	原动机、减速机、工作机固定不良 Prime mover, reducer and the operation device mount badly	查出固定不良部位，正确固紧 Find out the bad place,tighten it
	蜗轮副齿部磨耗或损伤 Tooth surface of worm gear sets worn-out or damaged	更换蜗轮副（需要时请咨询杰牌） Replace worm gear sets(we will cooperate with you when necessary)
	轴承磨损 Bearing worn-out	更换轴承 Replace Bearing
	螺栓松脱 Bolt loose	固紧螺栓 Tighten Screw
异 响 Noise	轴承损伤或间隙过大 Bearing damaged or too large clearance	更换轴承 Replace Bearing
	蜗轮副啮合不良 Worm gear sets mesh badly	修整齿面或更换蜗轮副（需要时请咨询杰牌） Mend tooth surface or replace worm gear sets (please contact to us)
	润滑油不足 Lubricant oil shortage	按油标指示点补加润滑油 Fill in adequate oil as indication
	机体内有异物 Foreign object in box	倒净润滑油带出异物，重加清洁润滑油 Discharge all the oil in order to put out foreign object, and refill clean oil
漏 油 Oil leakage	油封唇口磨损 Oil seal lip worn-out	更换油封 Replace oil seal
	油封档轴颈磨损 Shaft of oil seal area worn-out	更换输出轴或输入轴 Replace input or output shaft
	油量过多 Too much oil	按油标指示点调整油量 Discharge adequate oil as indication
	放油螺塞未旋紧 Oil screw plug loose	螺纹处加密封胶、旋紧螺塞 Tighten oil screw plug
	油标破损 Oil gauge damaged	更换油标 Replace oil gauge
蜗轮副齿面磨损过快 Tooth surface of worm gear sets abrade extra-quickly	超负荷运转 Overload	调整至适当负荷 Adjust to proper loading
	润滑油不符合要求 Lubricant oil not according with requirement	更换合适的润滑油 Replace proper lubricant oil
	润滑油不足 Lubricant oil shortage	按油标指示点加足润滑油 Fill adequate oil as indication
	未按规定适时换油，润滑油劣化 Not replacing lubricant oil in time according to requirement, oil deteriorates	按规定要求适时换油 Replacing oil in time according to requirement
	运转温度过高 Overheating while running	1. 按“过热”故障处理 2. 采取合适措施，降低环境温度 1. Deal with it as "Overheating" 2. Adopting proper measures to make environment temperature fall

注：如果发生其他故障无法解决时，请咨询杰牌。
Annotate:If other faults not listed above occur,please contact with us at any moment,we will supply thorough consultation and service.

六. JRSS 丝杆升降机
JRSS Screw Jack

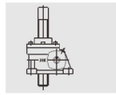

分 目 录

SUB-CONTENTS

1. 产品结构
Products Structure

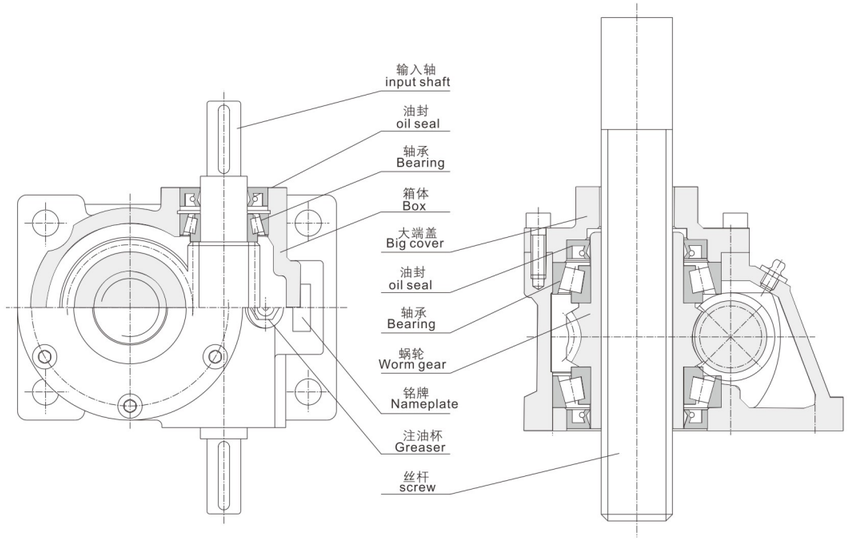

2. 型号说明
Model Description

J RSS D 100 - 12 - A R - 300 - B - P

1 2 3 4 5 6 7 8 9 10

1 企业代码
J–杰牌传动
Enterprise code
J–JIE Drive

2 产品代码
RSS–丝杆升降机
Products code
RSS–worm gear linear actuator

3 输入轴联接方式
D–带电机法兰
无代码–基本型
Connector of input shaft
D-with motor flange
Non-code-basic

4 规格
用蜗轮副中心距表示
100
Specification
Expressed by the center distance of a pair of Worm gear 100

5 传动比
12
Transmission ratio
12

6 安装方式代码
A、B—基本型
C、D—止旋构造型
E、F—活动螺母构造型
详见“4.3安装方式”
Mounting Option code
A.B– Basic Model
C.D– Screw fluctuate without rotation
E.F– Screw rotate without fluctuation
more information from 4.3 Mounting option

7 丝杆头部形式代码
Code of screw head
R 型（圆柱式）R-Column type
H 型（栓孔式）H-Bolt hole type
S 型（螺纹式）S-Screw type
T 型（顶板式）T-Coping type
详见“ 产品图片”
注：安装方式E、F时无此代码
Notes: Non-code-E.F mounting option

8 丝杆行程
300mm
Stroke of screw 300mm
共有100、200、300、400、500、600、800、1000mm 8种规格，根据使用情况选择，如需要其它长度行程，也可定做EF结构为TL尺寸
Total 8 species model:100.200.300.400.500. 600. 700. 800. 1000mm.choose according to using situation. If other model needed, canbe made to order The size of EF structure is TL

9 轴指向
shaft direction
JRSS系列共有A、B、C三种
JRSSD系列共有A、B、C、D四种
详见“轴指向表示”
JRSS series have A.B and C three species
JRSSD series have A. B. C and D four species

10 护管
safeguard pipe
P—带护管
P—With safeguard pipe
无代码—不带护管
Non-code-without safeguard pipe
注：安装方式E、F时无此代码
Notes: Non-code-E.F mounting option

3. 产品说明
Product Description

杰牌JRSS丝杆升降机，拥有自主知识产权，产品具有结构紧凑、升降平稳、高可靠性和安全自锁等亮点，包括JRSS丝杆升降机、JRSB滚珠丝杆升降机等全系列产品。

杰牌JRSS丝杆升降机，通过完整产品策划与设计和全价值链精益生产最优方案实施，推进精益生产、建设智能工厂，实现研产供销服一体化，以满足客户对快速响应的需求。

杰牌JRSS丝杆升降机，遵循模块化和最优化设计理念，全系列产品包括实心轴输入接口、IEC电机输入接口，圆柱式丝杆头部模块、栓孔式丝杆头部模块、螺纹式丝杆头部模块、顶板式丝杆头部模块，底脚安装、法兰安装等输入接口、输出模块和安装型式，同时支持多台丝杆升降机、锥齿轮转向器和不同型号规格减速机的模块化组合与集成，产品颜色为军黄色(锤纹漆)、RAL7031 或RAL5010，并可根据客户需要提供整体升降方案。

杰牌为全球好客户做好产品，杰牌智能传动方案提供商！

JRSS screw Jacks with independent intellectual property rights, is featured with compact structure, stable lifting, high reliability and safety self-locking. It includes JRSS screw Jack and JRSB ball screw Jack.

JRSS screw Jack promotes lean production, builds intelligent factories, and realizes the integration of research, production, supply, marketing and service, so as to meet customers' demand for rapid response through complete product planning and design such as “core product-extreme technology, peripheral product-extreme service, external product-extreme experience” and the implementation of the optimal plan of lean production in the whole value chain such as “product planning, design validation, processing test, assembly test, warehouse logistics, sales service, information system, HR, operation plan, strategy planning”.

JRSS screw Jack follows the concept of modular and optimized design. It includes solid shaft input interface, IEC electric motor input interface, cylindrical screw head module, bolt-hole type screw head module, threaded screw head module, top plate type screw head module, foot mounting, and flange mounting. At the same time, it supports the modular combination and integration of multi-screw Jacks, JRSS right angle bevel gear and gear motor of different models and specifications.The painting color is yellow, RAL7031 or RAL5010 & packed based on order. And available for customized base on customer requirements.

JIE is committed to providing great products for great partners across the world, JIE Intelligent Drive Solutions Provider.

4. 选型说明
Selection Description

4.1 杰牌传动JRSS产品选型表

使用工况：

应用行业：　　设备名称：
环境温度：　　环境湿度：
海拔高度：　　使用场地：□室内 □室外
起停频率：　　运行时间：
负载时间：□15% □25% □40% □60% □100%
现用品牌：　　现用型号：
存在问题：　　需改进项：

产品信息：

包装附件类：
包装材质：□纸箱 □木箱 □纸箱+木箱　　箱贴唛头：□中文 □英文
相关资料：□合格证 □出厂检验报告 □中文说明书 □英文说明书
附件清单：□护管 □三防布 □螺母 □无
外观标识类：
油漆颜色：□JMR-01 □JMG-01 □JGB-01 □RAL2002 □RAL5015 □RAL9003 □RAL7045 □RAL7031
防腐等级：□标准 □JS1 □JS2 □JS3 □JS4
铭牌要求：□中文 □英文
安装尺寸类：
产品类型：□JRSS □JRSSD
安装方式：□A □B □C □D □E □F （见附图）
丝杆头部型式（E、F安装方式无此项）：□无 □R □H □S □T （见附图）
轴指向：□A □B □C □D （见附图）
联动方式：□单台 □两台联动 □四台联动 □八台联动
性能指标类：
传动比：i= _____　　输出扭矩（Nm）：_____　　使用系数：_____
输入转速：□1800r/min □1500r/min □900r/min □600r/min □300r/min
起升速度：_____mm/min
总起升重量：_____kg
有效行程：□100mm □200mm □300mm □500mm □600mm □800mm □1000mm
电机类型：□标准电机 □变频电机 □防爆电机 □辊道电机 □起重电机 □伺服电机
电机极数：□2 □4 □6 □8　　电机功率：____ kW
额定电压：□220/380V □380/660V　　电机基频：□50Hz □60Hz □87Hz
绝缘等级：□F □H　　防护等级：□IP54 □IP55
工作制： □S1 □S3-40%　　冷却方式：□IC410 □IC411 □IC416
能效能级：□3级（IE3） □2级（IE4）　　旋转方向：□顺时针 □逆时针
制动电压：□DC 24V □AC 220V □AC 380V
制动器响应：□普通 □快速　　释放装置：□手柄释放HR □螺钉释放HF □无
风机电压：□DC 24V □AC 220V（1～）□AC 380V（1～） □AC 220/380V（3～）
风机频率：□50Hz □60Hz
释放装置与接线盒角度（从轴伸端看顺时针）：□0°□90°□180°□270°（见附图）
产品型号：

定制信息：

包装附件类：
外观标识类：
安装尺寸类：
性能指标类：
售后服务类：

服务信息：

售前服务：
培训咨询：□选型培训 □应用培训 □使用维护
设计选型：□参与设计 □设计校核 □产品选型
需求确认：□工况确认 □产品确认 □服务确认
售中服务：□驻厂全检 □过程抽检 □出厂检验
售后服务：□安装调试 □检测维护 □备品备件

商务信息：

运输方式：
交付地点：
交付时间：
订单数量：
结算价格：

附图：

安装方式：

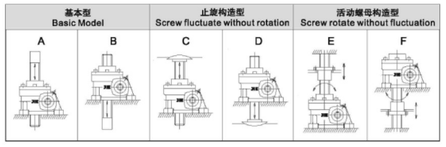

丝杆头部型式

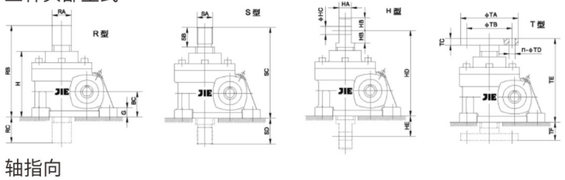

轴指向

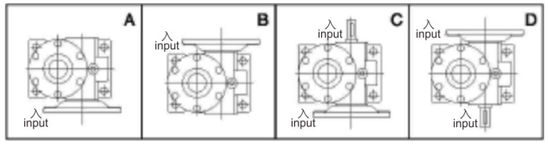

接线盒角度/出线位置：

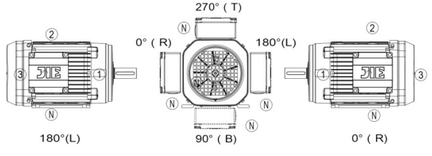

Selection Table of JIE JRSS Products

Conditions of use:

Application industry: Equipment name:
Ambient temperature: Ambient humidity:
Altitude: Site of use: ☐indoor ☐outdoor
Start-stop frequency: Running time:
Load time: ☐15% ☐25% ☐40% ☐60% ☐100%
Current brand: Current model:
Existing problem: Items needing improvement:

Product information:

Packing accessories:
Packaging material: ☐Carton ☐Wooden case ☐Carton + Wooden case Case mark: ☐Chinese ☐English
Relevant data: ☐Certificate of conformity ☐Ex-factory inspection report ☐Chinese operating instruction
☐English operating instruction
List of accessories: ☐Protection tube ☐Dust- proof fabric ☐Nut ☐None
Appearance identification:
Paint color: ☐JMR-01 ☐JMG-01 ☐JGB-01 ☐RAL2002 ☐RAL5015 ☐RAL9003 ☐RAL7045 ☐RAL7031
Nameplate requirement: ☐Chinese ☐English
Anti-corrosive grade: ☐Standard ☐JS1 ☐JS2 ☐JS3 ☐JS4
Installation dimension:
Product model: ☐JRSS ☐JRSSD
Mount position: ☐A ☐B ☐C ☐D ☐E ☐F(see attached figure)
Type of screw head (not applicable for E and F mount position): ☐None ☐R ☐H ☐S ☐T (see attached figure)
Shaft direction: ☐A ☐B ☐C ☐D (see attached figure)
Linkage mode: ☐ Single ☐Two ☐ Four ☐ Eight
Performance indicators:
Transmission ratio: i=_____ Output torque（Nm): _____ Service factor: _____
Input speed: ☐1800r/min ☐1500r/min ☐900r/min ☐600r/min ☐300r/min
Lifting speed: _____mm/min
Total lifting weight: _____kg
Effective stroke: ☐100mm ☐200mm ☐300mm ☐500mm ☐600mm ☐800mm ☐1000mm
Type of motor: ☐Standard motor ☐Frequency conversion motor ☐Explosion-proof motor ☐Roller motor
☐Lifting motor ☐Servo motor
Rated power: ____kW Pole number: ☐2 ☐4 ☐6 ☐8
Rated voltage: ☐220/380V ☐380/660V Motor frequency: ☐50Hz ☐60Hz ☐87Hz
Insulation grade: ☐F ☐H Protection grade: ☐IP55 ☐IP56
Working system: ☐S1 ☐S3-40% Cooling mode: ☐IC410 ☐IC411 ☐IC416
Energy efficiency class: ☐IE3 ☐IE4 Direction of rotation: ☐Clockwise ☐Counterclockwise
Braking voltage: ☐DC 24V ☐AC 220V ☐AC 380V
Brake response: ☐ Ordinary ☐ Fast Release device: ☐ Handle release HR ☐ Screw release HF ☐ None
Fan voltage: ☐DC 24V ☐AC 220V（1～）☐AC 220V（1～） ☐AC 380V（3～）
Fan frequency: ☐50Hz ☐60Hz
Angle between release device and terminal box (clockwise from the end of shaft extension) :
☐0° ☐90° ☐180° ☐270° (see attached figure)
Product model:

Customized information:

Packaging:
Appearance:
Installation dimension:
Performance indicators:
After-sales service:

Service information:

Pre-sales service:
Training consulting: ☐ Type selection training ☐ Application training ☐ Use and maintenance
Design selection: ☐ Participate in design ☐ Design verification ☐ Product selection
Demand confirmation: ☐ Working condition confirmation ☐ Product confirmation ☐ Service confirmation
In-sales service: ☐ On-site full inspection ☐ Process sampling ☐ Ex-factory inspection
After-sales service: ☐ Installation and commissioning ☐ Testing and maintenance ☐ Spare parts

Business information:

Transportation:
Delivery place:
Delivery time:
Order quantity:
Settlement price:

Attached figure:

Mount position:

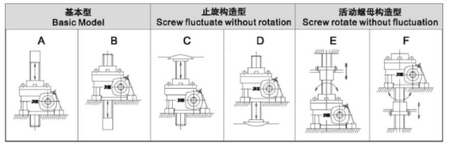

Type of screw head:

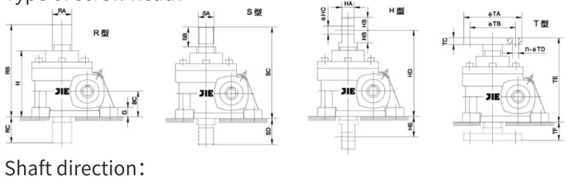

Shaft direction:

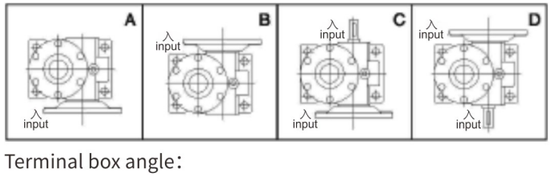

Terminal box angle:

Cable entry:

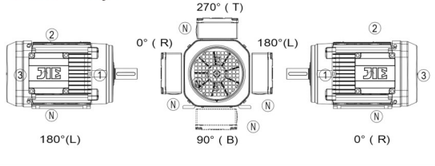

4.2 选型要素
Selection points

4.2.1 总当量载荷计算
Calculate total current load

$W_s=W_{max}\times f_s$

W_s--当量载荷 W_{max}--最大载荷 f_s--使用系数（详见附表1）

W_s--current load W_{max}--max load f_s--using coefficient (more information from table1)

表1 使用系数 f_s
Table 1 using coefficient(f_s)

使用工况 using situation	平稳载荷，负荷惯性小 Smooth load;light load inertia	轻微冲击载荷，负荷惯性中等 light shock load; mid load inertia	强冲击负荷，负荷惯性大 strong shock load; heavy load inertia
使用系数 using coefficient	1.0~1.3	1.3~1.5	1.5~3.0

4.2.2 单台升降机当量载荷的计算
Calculate current load of unit screw lifter

$W=W_s/(S\times f_d)$

W--单台当量载荷 W_s--当量载荷 S--联动台数 f_d--联动系数（详见附表2）

W--unit current load Ws--current load S --linkage quantity

f_d--linkage coefficient(more information from table 2)

表2 联动系数 f_d
Table 2 linkage coefficient(f_d)

联动台数 Linkage quantity	1	2	3	4	5-8
使用系数 Using coefficient	1	0.9	0.9	0.8	0.7

4.2.3 暂定升降机型号
Choose screw model

根据载重、升降速度、行程、驱动源暂时选定升降机型号(详情可参考“5、选型参数”)。
Choose screw model according to capacity, lifting speed, stroke and drive fountainhead.

4.2.4 丝杆行程选定
Option stroke of screw

在充分考虑丝杆运动惯性、各种顶端输出部件等各种情况下，选择有充分余量的丝杆行程。
丝杆计算（详见表3，丝杆行程用L表示，单位：mm）

Choose adequate stroke of screw with concerning enough screw movement inertia.

Calculate screw (more information from table 3)

表3 丝杆计算
Table 3 screw calculate

型号 Model	丝杆直径 Screw dia	护管长 length of protect pipe	丝杆头部S型 "S"type screw end		丝杆头部H型 "H"type screw end		丝杆头部R型 "R"type screw end		丝杆头部T型 "T"type screw end	
			总长=L+SC Total length=L+SC	牙长=总长-SD Tooth length=Total length-SD	总长=L+HB+HD Total length=L+HB+HD	牙长=总长-HB-HE Tooth length=Total length-HB-HE	总长=L+RB Total length=L+RB	牙长=总长-RC Tooth length=Total length-RC	总长=L+TE Total length=L+TE	牙长=总长-TF Tooth length=Total length-TF
JRSS35	Tr26×5	L+55	L+150	总长-40 Total length-40	L+20+165	总长-20-55 Total length-20-55	L+165	总长-55 Total length-55	L+135	总长-25 Total length-25
JRSS40	Tr32×6	L+60	L+180	总长-50 Total length-50	L+25+195	总长-25-65 Total length-25-65	L+195	总长-65 Total length-65	L+160	总长-30 Total length-30
JRSS50	Tr38×6	L+60	L+180	总长-50 Total length-50	L+25+195	总长-25-65 Total length-25-65	L+195	总长-65 Total length-65	L+160	总长-30 Total length-30
JRSS60	Tr46×8	L+65	L+220	总长-60 Total length-60	L+32+255	总长-32-95 Total length-32-95	L+225	总长-65 Total length-65	L+200	总长-40 Total length-40
JRSS60B	Tr52×8	L+65	L+220	总长-60 Total length-60	L+32+255	总长-32-95 Total length-32-95	L+225	总长-65 Total length-65	L+210	总长-50 Total length-50
JRSS70	Tr65×10	L+75	L+260	总长-80 Total length-80	L+35+295	总长-35-115 Total length-35-115	L+250	总长-70 Total length-70	L+235	总长-55 Total length-55
JRSS100	Tr75×12	L+85	L+300	总长-80 Total length-80	L+44+355	总长-44-135 Total length-44-135	L+295	总长-75 Total length-75	L+285	总长-65 Total length-65
JRSS120	Tr80×12	L+85	L+360	总长-100 Total length-100	L+54+410	总长-54-150 Total length-54-150	L+355	总长-95 Total length-95	L+330	总长-70 Total length-70
JRSS130	Tr90×14	L+110	L+435	总长-120 Total length-120	L+64+480	总长-64-165 Total length-64-165	L+430	总长-115 Total length-115	L+390	总长-75 Total length-75
JRSS150	Tr100×16	L+130	L+495	总长-150 Total length-150	L+70+545	总长-70-200 Total length-70-200	L+485	总长-140 Total length-140	L+445	总长-100 Total length-100

4.2.5 丝杆稳定性校核
Check screw stability

$P_{cr}=f_m\times(d^2/L_a)^2$

应确保 $P_{cr}>W\times S_f$(一般 $S_f=4$)

$P_{cr}=f_m\times(d^2/L_a)^2$ Should insure $P_{cr}>W\times S_f$(usual $S_f=4$)

P_{cr}--丝杆临界载荷(N) f_m--长度系数(详见附表4) d--丝杆底径(mm)(详见附表5)

L_a--作用点间距离(mm) W--单台升降机当量载荷(N) S_f--安全系数(一般取4)

P_{cr}--Screw critical loading(N) f_m-- Length coefficient(more information from table 4)

d-- Diameter of screw bottom(mm)(more information from table 5) L_a--Working length(mm)

W--Current load of unit screw lifter(N) S_f-- Security coefficient(usual S_f=4)

表4 长度系数(f_m)
Table 4 Length coefficient

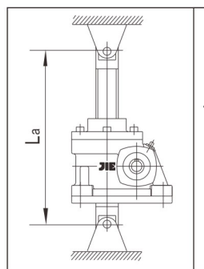	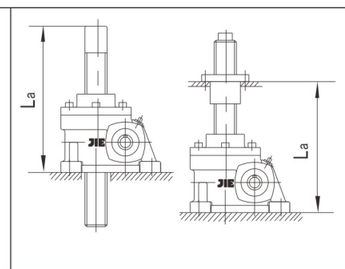	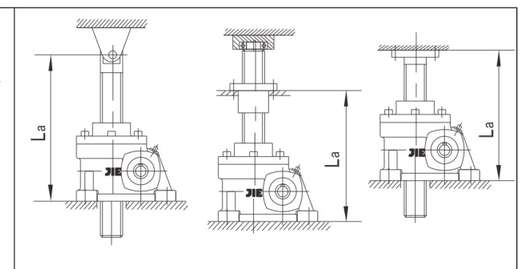
两端支撑 $f_m=10\times10^4$ Two ends sustained	底座固定,轴端自由 $f_m=2.5\times10^4$ Baseplate fixed,shaft end free	底座固定,轴端支撑或固定 $f_m=20\times10^4$ Baseplate fixed,shaft end sustained or fixed

4.2.6 丝杆转速校核
Check screw speed

$n_c=96\times10^6\times f_n\times d/L_b^2$

应确保$n_c>n_1/i$

should insure $n_c>n_1/i$

n_c--丝杆临界转速(r/min)　f_n--支撑系数(详见附表6)　d--丝杆底径(mm) (详见附表5)

L_b--支撑间距离(mm)　n_1--输入转速(r/min)　i--传动比

n_c--Permissible rotation speed of screw (r/min) ; f_n--Sustain coefficient (more information from table 6);

d--Diameter of screw bottom(mm)(more infor mation from table 5);

L_b--The distance between sustain(mm).　n_1--Input speed(r/min);　i--Transmission ratio;

4.2.7 输入功率校核
Check input power

$p=n_1\times p_1\times W/(9549\times2\pi\times i\times\eta)$

应确保P＜P额

should insure $p<p_{rated}$

p--所需输入功率(kW)　n_1--输入转速(r/min)　p_1--丝杆螺距(mm)

W--单台升降机当量载荷(kN)　π--圆周率　i--传动比　η--综合效率

P--Needed input power(kW); n_1--Input shaft screwing speed(r/min);　p_1--Axial pitch distance(mm)

w--Current load(kN);　π--pi　i--Transmission ratio　η--General efficiency

表5 丝杆底径d
Table 5 Diameter of screw bottom

型 号 Model	JRSS35	JRSS40	JRSS50	JRSS60	JRSS60B	JRSS70	JRSS100	JRSS120	JRSS130	JRSS150
丝 杆 底 径 Diameter of screwing bottom	20.5	25	31	37	43	54	62	67	74	82

表6 支撑系数 fn
Table 6 Sustain coefficient(fn)

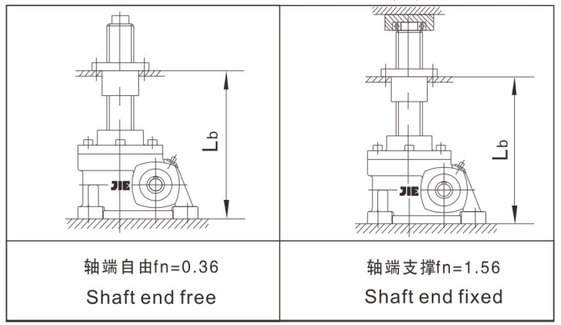

4.3 选型示例
Selection example

4.3.1 两台联动
Two sets linkage

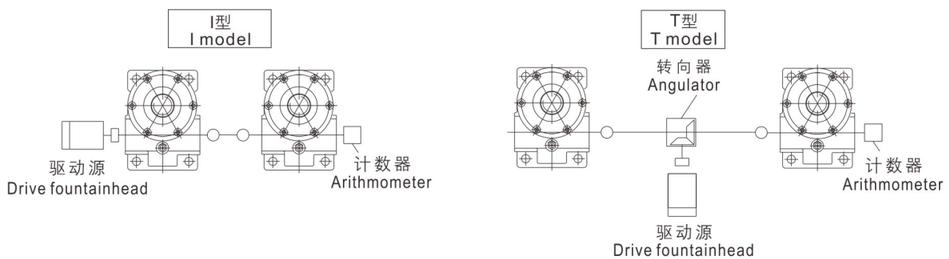

4.3.2 四台联动
Four sets linkage

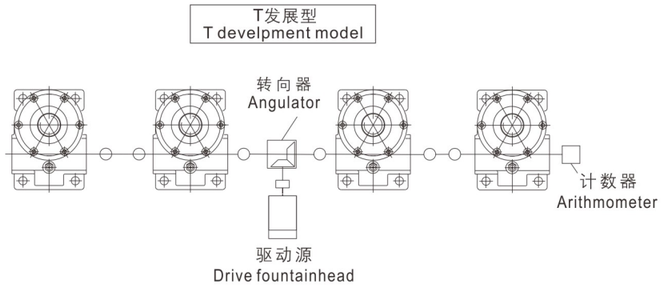

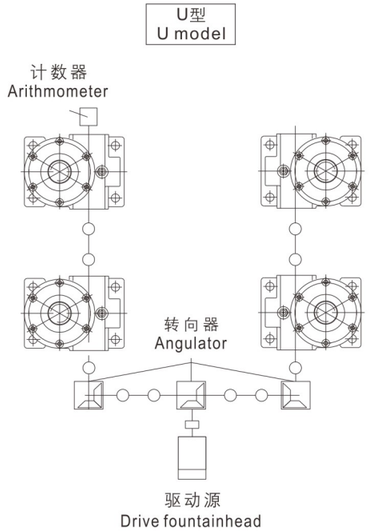

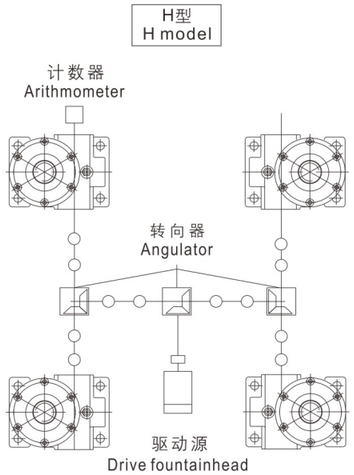

4.3.3 八台联动
Eight sets linkage

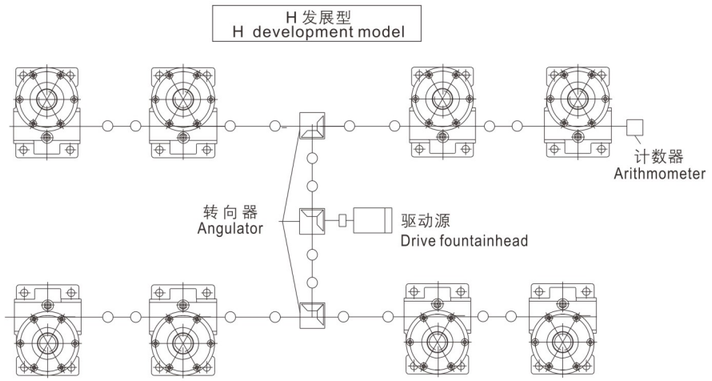

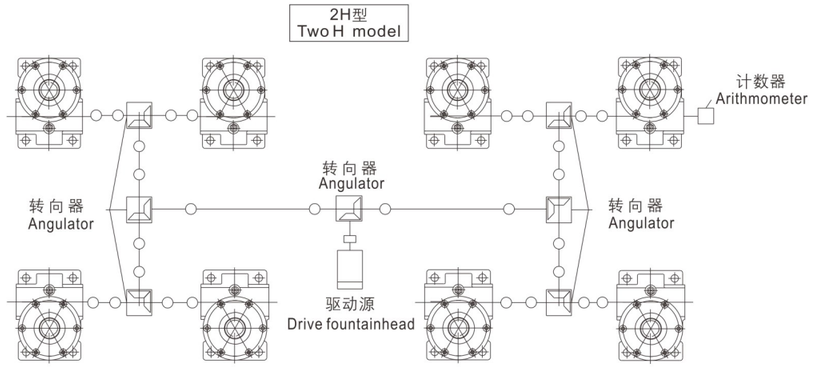

4.4 安装方式
Mounting Option

基本型 Basic Model		止旋构造型 Screw fluctuate without rotation		活动螺母构造型 Screw rotate without fluctuation	
A	B	C	D	E	F
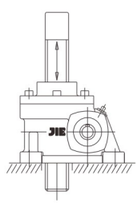	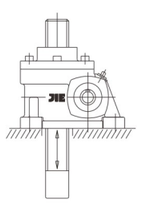	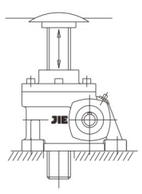	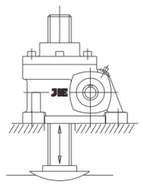	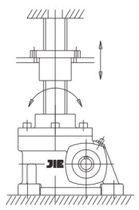	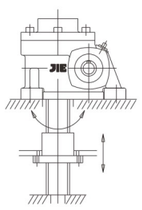

说明：
Explanation:

1、基本形式：螺母(蜗轮)转动丝杆上下移动，此为普通型升降机安装方式。
Basic Model: Screw fluctuate with rotation. This is the installation for basic screw lifter.
※注意：丝杆在升降时，会产生旋转力，所以必须做好防止旋转的措施。
※Notice: There will be rotation force when screw is ascending and decending. So it's need to prevent rotation.

2、止旋构造型：适用于顶端无连接下运转等各种不能实现防止旋转的场合。
Screw fluctuate without rotation:work under the situation (without connection on the top, etc.) Which can't prevent from rotating.

3、若想在有限的空间增长行程，可选用活动螺母(由用户自行设计制造配丝杆)构造型。此构造为丝杆旋转，活动螺母移动。若行程较长时，轴端应采用支撑方式，可得到很好的传动效果，
Screw rotate with travelling nut : This type is suitable for narrow space . If it has long stroke , shaft end should be supported for better transmission .

5. 技术参数
Technical Specifications

型号规格 Model size	传动比 Transmission ratio	入力轴转速 1800r/min Input shaft revolution speed 1800r/min			入力轴转速 1500r/min Input shaft revolution speed 1500r/min			入力轴转速 1200r/min Input shaft revolution speed 1200r/min			入力轴转速 900r/min Input shaft revolution speed 900r/min			入力轴转速 600r/min Input shaft revolution speed 600r/min			入力轴转速 300r/min Input shaft revolution speed 300r/min		
		入功率 (kW) Input power (kW)	起升力 (kg) Lifter force (kg)	起升速度 (m/min) Hoist speed (m/min)	入功率 (kW) Input power (kW)	起升力 (kg) Lifter force (kg)	起升速度 (m/min) Hoist speed (m/min)	入功率 (kW) Input power (kW)	起升力 (kg) Lifter force (kg)	起升速度 (m/min) Hoist speed (m/min)	入功率 (kW) Input power (kW)	起升力 (kg) Lifter force (kg)	起升速度 (m/min) Hoist speed (m/min)	入功率 (kW) Input power (kW)	起升力 (kg) Lifter force (kg)	起升速度 (m/min) Hoist speed (m/min)	入功率 (kW) Input power (kW)	起升力 (kg) Lifter force (kg)	起升速度 (m/min) Hoist speed (m/min)
JRSS35	1/5	0.69	500	1.80	0.64	550	1.50	0.65	700	1.20	0.63	900	0.90	0.46	1000	0.60	0.37	1000	0.30
	1/10	0.37	500	0.90	0.37	550	0.75	0.37	700	0.60	0.37	950	0.45	0.37	1000	0.30	0.19	1350	0.15
	1/20	0.37	600	0.45	0.37	700	0.38	0.37	900	0.30	0.37	1200	0.23	0.19	1350	0.15	0.19	1350	0.08
JRSS40	1/6	0.98	700	1.80	0.93	800	1.50	0.88	950	1.20	0.91	1300	0.90	0.84	1800	0.60	0.42	1800	0.30
	1/12	0.66	950	0.90	0.64	1100	0.75	0.61	1300	0.60	0.57	1650	0.45	0.46	2000	0.30	0.37	2000	0.15
	1/24	0.37	950	0.45	0.37	1100	0.38	0.37	1300	0.30	0.37	1650	0.23	0.37	2000	0.15	0.19	2000	0.08
JRSS50	1/6	1.39	900	1.80	1.28	1000	1.50	1.24	1200	1.20	1.16	1500	0.90	0.87	1700	0.60	0.54	2100	0.30
	1/12	1.10	1350	0.90	1.01	1500	0.75	0.98	1800	0.60	0.87	2150	0.45	0.58	2150	0.30	0.37	2500	0.15
	1/24	0.78	1800	0.45	0.72	2000	0.38	0.69	2400	0.30	0.55	2550	0.23	0.42	2900	0.15	0.37	2850	0.08
JRSS60	1/8	2.12	1300	1.80	1.97	1450	1.50	1.85	1700	1.20	1.72	2100	0.90	1.66	3050	0.60	1.31	4800	0.30
	1/16	1.12	1300	0.90	1.04	1450	0.75	0.98	1700	0.60	0.95	2200	0.45	0.87	3050	0.30	0.69	4800	0.15
	1/32	0.80	1750	0.45	0.75	1950	0.38	0.69	2250	0.30	0.64	2800	0.23	0.63	4100	0.15	0.48	6400	0.08
JRSS60B	1/8	2.00	1300	1.80	1.86	1450	1.50	1.75	1700	1.20	1.62	2100	0.90	1.57	3050	0.60	1.24	4800	0.30
	1/16	1.06	1300	0.90	0.98	1450	0.75	0.93	1700	0.60	0.89	2200	0.45	0.83	3050	0.30	0.65	4800	0.15
	1/32	0.75	1750	0.45	0.70	1950	0.38	0.65	2250	0.30	0.61	2800	0.23	0.59	4100	0.15	0.46	6400	0.08
JRSS70	1/10	2.66	1400	1.80	2.42	1850	1.50	2.25	1950	1.20	2.12	2450	0.90	1.93	3350	0.60	1.41	4900	0.30
	1/20	1.42	1600	0.90	1.47	1850	0.75	1.37	2250	0.60	1.28	2800	0.45	1.18	3850	0.30	0.86	5600	0.15
	1/40	1.14	2400	0.45	1.17	2800	0.38	1.09	3350	0.30	1.07	4400	0.23	0.93	5750	0.15	0.69	8400	0.08
JRSS100	1/12	3.62	1850	1.80	3.51	2150	1.50	3.39	2600	1.20	3.18	3250	0.90	2.94	4500	0.60	2.09	6400	0.30
	1/18	2.65	1900	1.20	2.68	2300	1.00	2.57	2750	0.80	2.45	3500	0.60	2.19	4700	0.40	1.56	6700	0.20
	1/36	1.66	2200	0.60	1.63	2600	0.50	1.60	3200	0.40	1.47	3900	0.30	1.36	5400	0.20	1.20	9600	0.10
JRSS120	1/12	4.15	1975	1.80	4.02	2300	1.50	3.81	2725	1.20	3.80	3625	0.90	3.48	4975	0.60	2.48	7050	0.30
	1/18	3.20	2125	1.20	3.20	2550	1.00	3.04	3025	0.80	3.03	4025	0.60	2.74	5450	0.40	1.94	7725	0.20
	1/36	2.14	2625	0.60	2.07	3050	0.50	1.98	3650	0.40	1.99	4875	0.30	1.80	6600	0.20	1.40	10300	0.10
JRSS130	1/7	9.47	2100	3.60	9.17	2450	3.00	9.02	2850	2.40	8.58	4000	1.80	8.20	5450	1.20	5.84	7750	0.60
	1/14	5.76	2350	1.80	5.71	2800	1.50	5.57	3300	1.20	5.39	4550	0.90	5.06	6200	0.60	3.57	8750	0.30
	1/28	4.07	3050	0.90	3.89	3500	0.75	3.91	4100	0.60	3.65	5850	0.45	3.48	7800	0.30	2.45	11000	0.15
JRSS150	1/8	16.3	3500	3.60	16.1	4000	3.00	15.8	5400	2.40	15.1	7100	1.80	14.8	9850	1.20	9.70	12950	0.60
	1/16	11.7	4300	1.80	11.6	5400	1.50	10.5	7200	1.20	11.00	9450	0.90	9.62	11800	0.60	7.08	17350	0.30
	1/32	8.65	5500	0.90	9.55	6800	0.75	7.35	10000	0.60	7.53	14300	0.45	7.02	15750	0.30	5.80	26050	0.15

6. 安装尺寸
Mounting Dimensions

6.1 JRSS 安装尺寸
Mounting Dimensions of JRSS

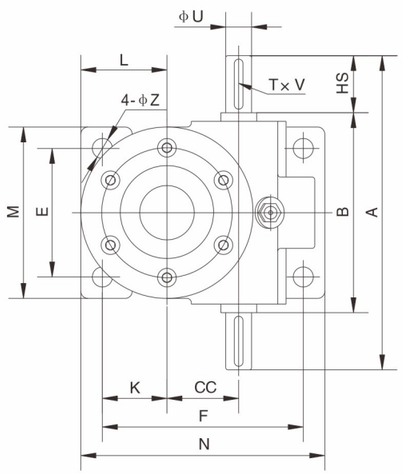

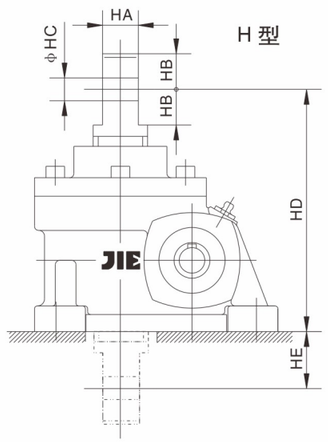

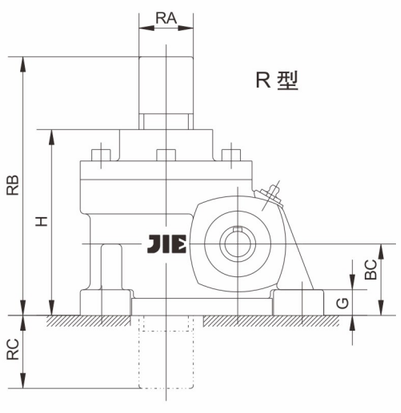

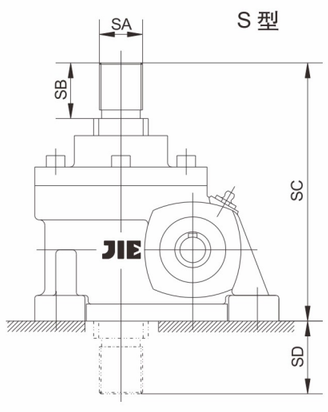

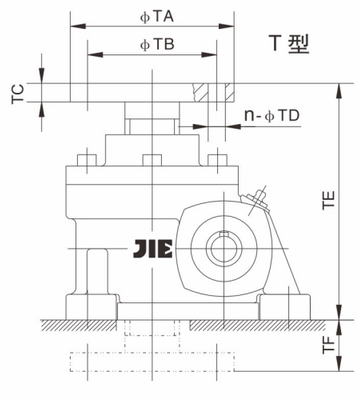

轴指向表示 SHAFT DIRECTION

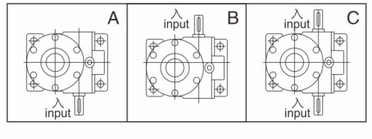

型号 规格 Model size	A B HS	E F Z	BC G H	CC K	Tr	L M N	U T×V	重量 Weight (kg)	丝杆头部型式 Type of screw head						
									R 型	H 型		S 型		T 型	
									RA RB RC	HA HB HC	HD HE	SA	SB SC SD	TA TB TC	n-TD TE TF
JRSS35	170 110 30	66 111 12	40 15 110	35 38	Tr26×5	50 90 135	15 5×3	5	26 165 55	16 20 12	165 55	M16×1.5	28 150 40	88 70 10	4-ϕ10 135 25
JRSS40	220 140 40	80 125 12	50 18 130	40 42	Tr32×6	57 110 155	18 6×3.5	5	32 195 65	20 25 14	195 65	M22×1.5	32 180 50	98 80 13	4-ϕ10 160 30
JRSS50	220 140 40	90 140 14	50 18 130	50 45	Tr38×6	60 120 170	18 6 x 3.5	18	38 195 65	25 25 16	195 65	M30×1.5	35 180 50	114 90 13	4-ϕ12 160 30
JRSS60	256 176 40	100 190 18	60 20 160	60 70	Tr46×8	90 140 230	25 8×4	21	46 225 65	32 32 20	255 95	M33×1.5	40 220 60	138 100 16	4-ϕ14 200 40
JRSS60B	264 184 40	110 190 18	60 20 160	60 70	Tr52×8	90 150 230	25 8×4	21	52 225 65	36 32 24	255 95	M39×1.5	45 220 60	148 110 20	4-ϕ18 210 50
JRSS70	316 216 50	140 210 18	70 25 180	70 75	Tr65×10	95 180 250	28 8×4	31	65 250 70	44 35 26	295 115	M45×1.5	55 260 80	178 125 25	4-ϕ21 235 55
JRSS100	390 260 65	190 260 22	85 30 220	100 85	Tr75×12	110 230 310	32 10×5	59	75 295 75	56 44 35	355 135	M60×2	65 300 80	188 140 28	4-ϕ21 285 65
JRSS120	420 290 65	210 305 22	100 30 260	120 105	Tr80×12	130 260 355	35 10×5	104	80 355 95	60 54 38	410 150	M64×2	70 360 100	218 170 30	4-ϕ25 330 70
JRSS130	480 340 70	240 355 22	120 30 315	130 130	Tr90×14	160 300 415	45 14×5.5	97	90 430 115	70 64 45	480 165	M76×2	75 435 120	248 200 32	4-ϕ27 390 75
JRSS150	550 360 95	250 385 27	125 35 345	150 135	Tr100×16	170 320 455	50 14×5.5	147.5	100 485 140	80 70 55	545 200	M90×2	100 495 150	358 280 35	6-ϕ27 445 100

6.2 JRSSD 安装尺寸
Installation Dimensions of JRSSD

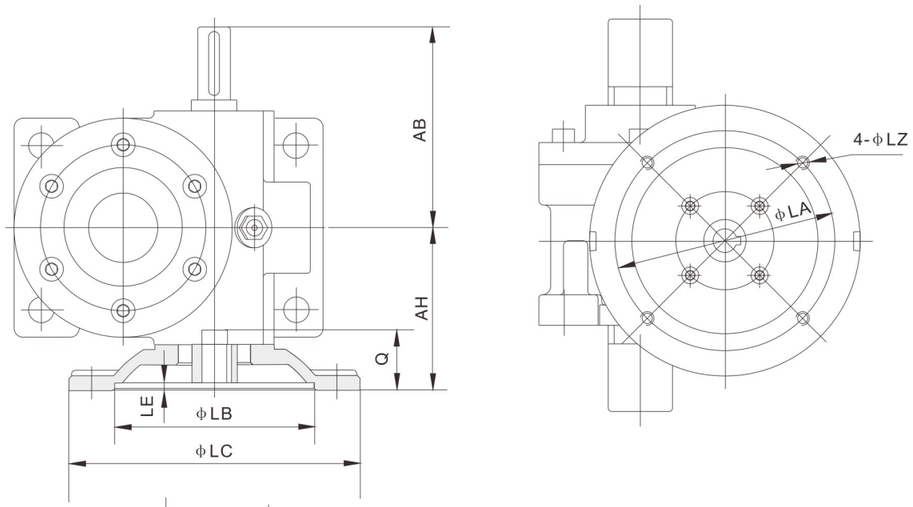

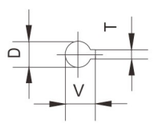

轴指向表示 SHAFT DIRECTION

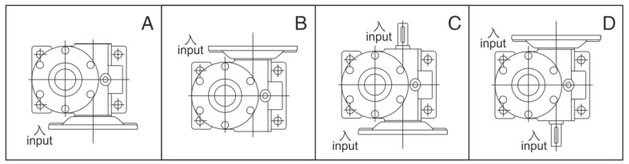

型号规格 Model size	法兰规格 Flange size	AB	AH	LA	LB	LC	LE	LZ	D	Q	T×V
JRSSD40	71B5	110	72	130	110	160	4	M8	ϕ14	34	5×16.3
JRSSD50	71B5	110	80	130	110	160	4	M8	ϕ14	34	5×16.3
JRSSD60	80B5	128	100	165	130	200	4.5	M10	ϕ19	43	6×21.8
JRSSD60B	80B5	132	100	165	130	200	4.5	M10	ϕ19	43	6×21.8
JRSSD70	90B5	158	118	165	130	200	4.5	M10	ϕ24	52	8×27.3
JRSSD100	100/112B5	195	150	215	180	250	5	M12	ϕ28	63	8×31.3
JRSSD120	100/112B5	210	165	215	180	250	5	M12	ϕ28	63	8×31.3
JRSSD130	132B5	240	194	265	230	300	5	M12	ϕ38	83	10×41.3
JRSSD150	132B5	275	218	265	230	300	5	M12	ϕ38	83	10×41.3

6.3 JRSS-EF安装尺寸
JRSS-EF installation size

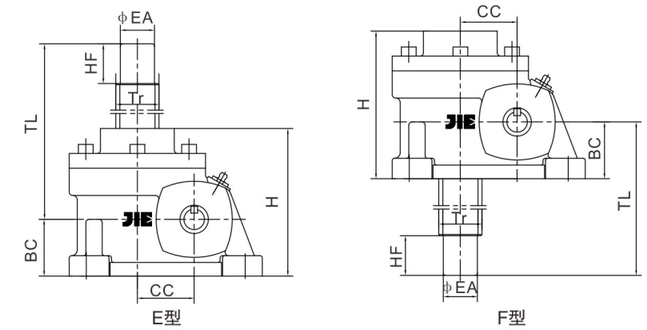

尺寸size / 规格型号 Model size	CC	Tr	H	BC	HF	EA	E型 丝杆总长 screw length	E型 螺纹有效长度 effective thread length	F型 丝杆总长 screw length	F型 螺纹有效长度 effective thread length
JRSS35	35	Tr26x5	110	40	28	20	TL+21	TL-98	TL+30	TL-86
JRSS40	40	Tr32x6	130	50	32	25	TL+30	TL-112	TL+33	TL-104
JRSS50	50	Tr38x6	130	50	35	30	TL+26	TL-115	TL+33	TL-104
JRSS60	60	Tr46x8	160	60	40	35	TL+30	TL-140	TL+43	TL-120
JRSS60B	60	Tr52x8	160	60	45	40	TL+30	TL-145	TL+43	TL-130
JRSS70	70	Tr65x10	180	70	55	50	TL+33	TL-165	TL+41	TL-155
JRSS100	100	Tr75x12	220	85	65	60	TL+45	TL-200	TL+53	TL-150
JRSS120	120	Tr80x12	260	100	70	65	TL+49	TL-230	TL+42	TL-170
JRSS130	130	Tr90x14	315	120	75	70	TL+67	TL-270	TL+32	TL-230
JRSS150	150	Tr100x16	345	125	100	80	TL+61	TL-320	TL+58	TL-225

6.4 护管安装尺寸
Protect pipe installation size

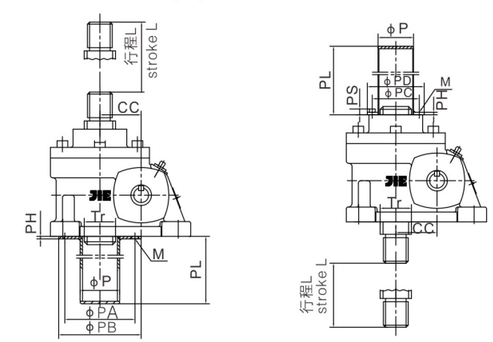

尺寸size / 规格型号 Model size	CC	Tr	ϕP	ϕPA	ϕPB	ϕPC	ϕPD	PH	PS	PL	M
JRSS35	35	Tr26x5	30	62	74	38.5	48	3	7	L+55	M4
JRSS40	40	Tr32x6	36	80	92	47	58	3	8	L+60	M5
JRSS50	50	Tr38x6	46	85	100	55	67	3	8	L+60	M5
JRSS60	60	Tr46x8	52.5	104	120	63.5	77	3	9	L+65	M6
JRSS60B	60	Tr52x8	60	115	130	72	86	3	9	L+65	M6
JRSS70	70	Tr65x10	72.5	132	148	83	96	3	9	L+75	M6
JRSS100	100	Tr75x12	86	160	180	98	112	3	9	L+85	M6
JRSS120	120	Tr80x12	96	160	180	116	130	4	9	L+85	M6
JRSS130	130	Tr90x14	102	160	180	120	142	6	14	L+110	M8
JRSS150	150	Tr100x16	115	180	200	135	160	6	14	L+130	M8

7. 使用说明
Operating Instructions

7.1 产 品 说 明
Product Introduction

7.1.1 JRSS系列丝杆升降机(又名千斤顶);
JRSS series worm gear screw lifter (other name is Jack);

7.1.2 具有结构紧凑、体积小的特点;
Compact structure, small size;

7.1.3 安装方便、形式多;
Easy mounting, varied types;

7.1.4 可靠性高、寿命长;
High reliability. Long service life;

7.1.5 具有起升、下降及借助辅件推进、翻转等多种功能;
With the function of ascending, descending, thrusting, overturning;

7.1.6 可单台使用，也可多台组成使用;
Can be applied in one unit or multiple units;

7.1.7 动力源广泛，可用电动机或其它动力直接带动，也可以用手动;
Wide motivity. It can be drived by electrical motor and manual force;

7.1.8 通常用于低速重载的场合。广泛应用于冶金、机械、建筑、水利、医疗、化工等各个行业。
It is usually used in low speed situation, widely used in the fields of metallurgy, mechanical, construction,c hemical, irrigation works,medical treatment.

7.2 使用注意事项
Notices of usage

7.2.1 请严格按承载能力表选择合适的传动比和与之对应的具有充分裕度的载荷的升降机;
Select the model with proper transmission ratio and load.

7.2.2 升降机工作时应控制减速机表面和升降螺母表面温度在-15℃~80℃;
The surface temperature of gearbox and nut should be controlled in -15℃~80℃ when the screw lifter is working.

7.2.3 升降机不得连续运转，单台升降机的负荷时间率(T%)以30分钟为单位计算，不得超过20%;
The screw lifter cannot work all the time. The unit is thirty mins for duty ratio of unit one and can not exceed 20%.

$$\text{负荷时间率 T\%} \atop \text{Duty ratio (T\%)} = \frac{\text{1动作周期的工作时间 Time under working/cycle}}{\text{1动作周期的工作时间+1动作周期的停歇时间 Time under working/cycle + interval/cycle}} \times 100\%$$

7.2.4 必须保证有充足的驱动源动力;
Insure adequate drive fountainhead.

7.2.5 升降机理论上有自锁功能，但在振动冲击较大的场合会造成自锁功能失灵，请务必加制动装置;
Theoretically screw has self-lock function, but the self-lock function may not work in heavy shock condition;

7.2.6 升降机使用环境:
Using situation for screw lifter.

使用环境 Using situation	室内无雨水侵入的场所 No rain and water
周围空气 Ambient air	灰尘为一般工厂状况 Dust: usual condition for mill
环境湿度 Ambient temperature	-15℃~40℃
相对湿度 Comparative humidity	85%以下 Below 85%

7.2.7 升降机工作时一般不允许有横向载荷，若有横向载荷时，请加导向装置。
Transverse load is not allowed when screw lifter is working . If transverse load occured, please add direction setting.

8. 油品润滑
Lubricant

8.1 润滑油（脂）选用表
Lubricants for reducer used in can be chosen as the table below

蜗杆转速(r/min) Worm shaft speed(r/min)	润滑油（脂）类型 Lubricant
1500~1800	ISO VG680
300~1500	NLGI 1或NLGI 2

注：合成锂基润滑脂温度范围-20℃～100℃
Note: The temperature range of synthetic lime-sode basic lubricant grease ZNLGI 1 or NLGI 2 is -20℃~100℃

8.2 润滑油（脂）注油量(L)
Lubricants capacity(L)

型号 Type / 规格 Size	JRSS35	JRSS40	JRSS50	JRSS60	JRSS60B	JRSS70	JRSS100	JRSS120	JRSS130	JRSS150
注油量 Lubricant capacity	0.06	0.1	0.2	0.35	0.4	0.5	1.5	2.2	3.5	4.0

9. 故障分析
Malfunctions Analysis

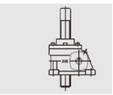

故障情况 Fault Description	故障原因 Reasons	解决办法 Solutions
振 动 Vibration	原动机与升降机连接不当 Improper connection among prime mover and lifter	调整至适当位置，重新正确固紧 Adjust to proper position
	蜗轮副齿部磨耗或损伤 Tooth surface of worm gear sets worn-out or damaged	更换蜗轮副（需要时请咨询杰牌） Replace worm gear sets (We will cooperate with you when necessary)
	轴承磨损 Bearing worn-out	更换轴承 Replace bearing
	螺栓松脱 Bolt loose	固紧螺栓 Tighten screw
异 响 Noise	轴承损伤或间隙过大 Bearing damaged or too large clearance	更换轴承 Replace bearing
	蜗轮副啮合不良 Worm gear sets mesh badly	修整齿面或更换蜗轮副（需要时请咨询杰牌） Mend tooth surface or replace worm gear sets (please contact to us)
	润滑油（脂）过少 Lubricant shortage	补加润滑油(脂) Fill in adequate oil as indication
漏 油 Oil leakage	油封唇口磨损 Oil seal lip worn-out	更换油封 Replace oil seal
	油封档轴颈磨损 Shaft of oil seal area worn-out	更换输入轴或蜗轮 Replace input or worm gear
蜗轮副齿面磨损过快 Tooth surface of worm gear set abrade extra-quickly	超负荷运转 Over load	调整至适当负荷 Adjust to proper loading
	润滑油（脂）不符合要求 Lubricant oil not according with requirement	按油品润滑更换润滑油（脂） Replace proper lubricant oil
	润滑油（脂）过少 Lubricant shortage	补加润滑油（脂） Fill adequate oil as indication
	未按规定适时换油，润滑油劣化 Not replacing lubricant oil in time accor-ding to requirement,oil deteriorates	按规定要求适时换油 Replacing oil in time according to requiremen
	运转温度过高 Overheating while running	采取合适措施，降低环境温度 Adopting proper measures to make environment temperature fall
丝杆副齿面磨损过快 Screw surface of worm gear sets abrade extra-quickly	超负荷运转 Over loading	调整至适当负荷 Adjust to proper loading
	润滑脂干枯或变质 Lubricant shortage or gone bad	去污擦净，重新加润滑脂 Washover dirty oil and refill proper lubricant
	有横向载荷 There is transverse load	加导向装置 Add direction setting

注：如果发生其他故障无法解决时，请咨询杰牌。

Note: If other faults not listed above occur ,please contact to us at any moment .We will supply thorough consultation and service.

七. JRTM 锥齿轮转向器
JRTM Bevel Steering Gear

分 目 录

SUB-CONTENTS

1. 产品结构
Products Structure

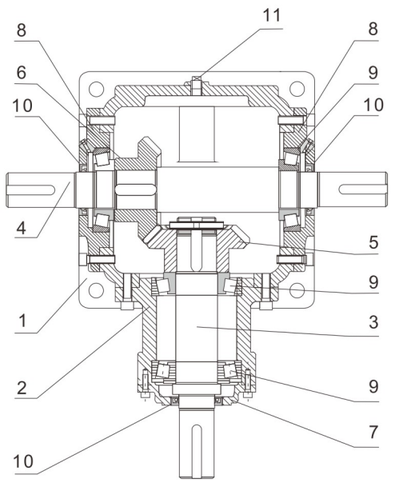

1、	机　　座	Housing
2、	横　轴　座	Housing of input shaft
3、	横　　轴	Input shaft
4、	纵　　轴	Output shaft
5、	横轴锥齿轮	Drive spiral bevel gear
6、	纵轴锥齿轮	Driven spiral bevel gear
7、	端　　盖	Bearing seat of input shaft
8、	端　　盖	Bearing seat of output shaft
9、	轴　　承	Bearing
10、	油　　封	Oil Seal
11、	油　　镜	Oil gauge

2. 型号说明
Model Description

J - RTM - 06 - 1:1 - I-LRO - B3

1 2 3 4 5 6

1 企业代码
J–杰牌传动
Enterprise code
J–JIE Drive

2 产品代码
Product Code
RTM– 锥齿轮转向器
RTM–bevel steering gear

3 规格
Specification

4 传动比
Transmission ratio
增速：1：2　减速：2：1
Multiplier:1:2　Reducer:2:1

5 轴配置
Shaft arrangement

6 安装方法
Mounting position

3. 产品说明
Product Description

杰牌JRTM锥齿轮转向器，拥有自主知识产权，产品采用铸铁箱体，具有坚固耐用、运转平稳、高效率和长寿命等亮点，包括JRTM通用型和JRTM+精密型等全系列产品。

杰牌JRTM锥齿轮转向器，通过完整产品策划与设计和全价值链精益生产最优方案实施，推进精益生产、建设智能工厂，实现研产供销服一体化，以满足客户对快速响应的需求。

杰牌JRTM锥齿轮转向器，遵循模块化和最优化设计理念。产品包括实心轴输入接口，实心轴输出模块，底脚安装、多面安装等输入接口、输出模块和安装型式，同时支持多台锥齿轮转向器、丝杆升降机和不同型号规格减速机的模块化组合与集成，产品颜色为RAL5010，并按单包装，可根据客户需要提供整体升降方案。

杰牌为全球好客户做好产品，杰牌智能传动方案提供商！

JRTM bevel steering gear with independent intellectual property rights. The product uses the cast iron housing, which is durable and features smooth running, high efficiency and long service life. It includes JRTM universal and JRTM precision models.

JRTM bevel steering gear promotes lean production, builds intelligent factories, and realizes the integration of research, production, supply, marketing and service, so as to meet customers' demand for rapid response through complete product planning and design such as “core product-extreme technology, peripheral product-extreme service, external product-extreme experience” and the implementation of the optimal plan of lean production in the whole value chain such as “product planning, design validation, processing test, assembly test, warehouse logistics, sales service, information system, HR, operation plan, strategy planning”.

JRTM bevel steering gear follows the concept of modular and optimized design. It includes solid shaft input interface, solid shaft output module, foot mounting, and multifaceted mounting. At the same time, it supports the modular combination and integration of multi-right angle bevel gear unit, screw jack and gear motors of different models and specifications. The painting color is RAL5010 & packed based on order.And it can provide an overall lifting solution according to customer needs.

JIE is committed to providing great products for great partners across the world, JIE Intelligent Drive Solutions Provider.

4. 选型说明
Selection Description

4.1 杰牌传动JRTM产品选型表

使用工况：

应用行业：　　设备名称：

环境温度：　　环境湿度：

海拔高度：　　使用场地：□室内 □室外

起停频率：　　运行时间：

负载时间：□15% □25% □40% □60% □100%

现用品牌：　　现用型号：

存在问题：　　需改进项：

产品信息：

包装附件类：

包装材质：□纸箱 □木箱 □纸箱+木箱　　箱贴唛头：□中文 □英文

相关资料：□合格证 □出厂检验报告

外观标识类：

油漆颜色：□JMR-01 □JMG-01 □JGB-01 □RAL2002 □RAL5015 □RAL9003 □RAL7045 □RAL7031

防腐等级：□标准 □JS1 □JS2 □JS3 □JS4

铭牌要求：□中文 □英文

安装尺寸类：

产品类型：□JRTM

安装方式：□B3 □B6 □B7 □B8 □V5 □V6 （见附图）

轴配置及旋转方向：□I-LR □I-R □I-L □I-LR-O □I-R-O □I-L-O
□I-UD □I-U □I-D □I-UD-O □I-U-O □I-D-O
□U-LR □U-R □U-L □U-LR-O □U-R-O □U-L-O
□D-LR □D-R □D-L □D-LR-O □D-R-O □D-L-O
□I-I-LR □I-I-R □I-I-L □I-I-LR-O □I-I-R-O □I-I-L-O
□I-I-UD □I-I-U □I-I-D □I-I-UD-O □I-I-U-O □I-I-D-O
□U-D-LR □U-D-R □U-D-L □U-D-LR-O □U-D-R-O □U-D-L-O

联动方式：□单台 □两台联动 □三台联动 □四台联

性能指标类：

传动比：i=_____　　输出扭矩（Nm）：_____　　使用系数：_____

输入转速：□1450r/min □1150r/min □870r/min □580r/min □400r/min □300r/min □200r/min
□100r/min □10/min

产品型号：

定制信息：

包装附件类：

外观标识类：

安装尺寸类：

性能指标类：

售后服务类：

服务信息：

售前服务：

培训咨询：□选型培训 □应用培训 □使用维护

设计选型：□参与设计 □设计校核 □产品选型

需求确认：□工况确认 □产品确认 □服务确认

售中服务：□驻厂全检 □过程抽检 □出厂检验

售后服务：□安装调试 □检测维护 □备品备件

商务信息：

运输方式：

交付地点：

交付时间：

订单数量：

结算价格：

附图：

安装方式：

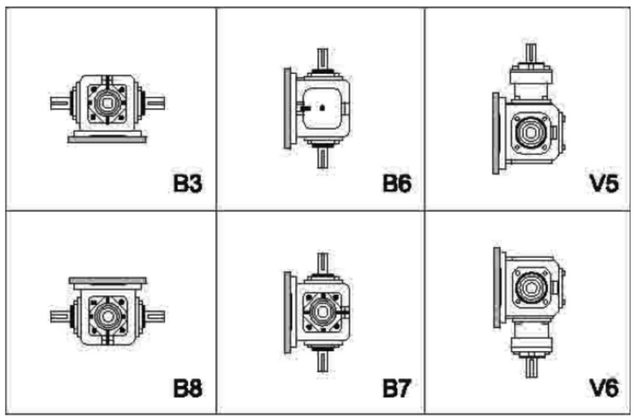

Selection Table of JIE JRTM Products

Conditions of use:

Application industry: Equipment name:

Ambient temperature: Ambient humidity:

Altitude: Site of use: ☐indoor ☐outdoor

Start-stop frequency: Running time:

Load time: ☐15% ☐25% ☐40% ☐60% ☐100%

Current brand: Current model:

Existing problem: Items needing improvement:

Product information:

Packing accessories:

Packaging material: ☐Carton ☐Wooden case ☐Carton + Wooden case Case mark: ☐Chinese ☐English

Relevant data: ☐Certificate of conformity ☐Ex-factory inspection report ☐Chinese operating instruction ☐English operating instruction

List of accessories: ☐Torque arm ☐Protective cover ☐Single output shaft ☐Double output shaft ☐Base

Appearance identification:

Paint color: ☐JMR-01 ☐JMG-01 ☐JGB-01 ☐RAL2002 ☐RAL5015 ☐RAL9003 ☐RAL7045 ☐RAL7031

Nameplate requirement: ☐Chinese ☐English

Installation dimension:

Product model: ☐JRTM

Mount position: ☐B3 ☐B6 ☐B7 ☐B8 ☐V5 ☐V6

Shaft configuration and Direction of rotation:

☐I-LR ☐I-R ☐I-L ☐I-LR-O ☐I-R-O ☐I-L-O

☐I-UD ☐I-U ☐I-D ☐I-UD-O ☐I-U-O ☐I-D-O

☐U-LR ☐U-R ☐U-L ☐U-LR-O ☐U-R-O ☐U-L-O

☐D-LR ☐D-R ☐D-L ☐D-LR-O ☐D-R-O ☐D-L-O

☐I-I-LR ☐I-I-R ☐I-I-L ☐I-I-LR-O ☐I-I-R-O ☐I-I-L-O

☐I-I-UD ☐I-I-U ☐I-I-D ☐I-I-UD-O ☐I-I-U-O ☐I-I-D-O

☐U-D-LR ☐U-D-R ☐U-D-L ☐U-D-LR-O ☐U-D-R-O ☐U-D-L-O

Linkage mode: ☐Single station ☐Two linkage ☐Three linkage ☐Four linkage

Performance indicators:

Transmission ratio: i=_____ Output torque (Nm): _____ Service factor: _____

Input speed: ☐1450r/min ☐1150r/min ☐870r/min ☐580r/min ☐400r/min ☐300r/min ☐200r/min ☐100r/min ☐10/min

Product model:

Customized information:

Packaging:

Appearance:

Installation dimension:

Performance indicators:

After-sales service:

Service information:

Pre-sales service:

Training consulting: ☐ Type selection training ☐ Application training ☐ Use and maintenance

Design selection: ☐ Participate in design ☐ Design verification ☐ Product selection

Demand confirmation: ☐ Working condition confirmation ☐ Product confirmation ☐ Service confirmation

In-sales service: ☐ On-site full inspection ☐ Process sampling ☐ Ex-factory inspection

After-sales service: ☐ Installation and commissioning ☐ Testing and maintenance ☐ Spare parts

Business information:

Transportation:

Delivery place:

Delivery time:

Order quantity:

Settlement price:

Attached figure:

Mount position:

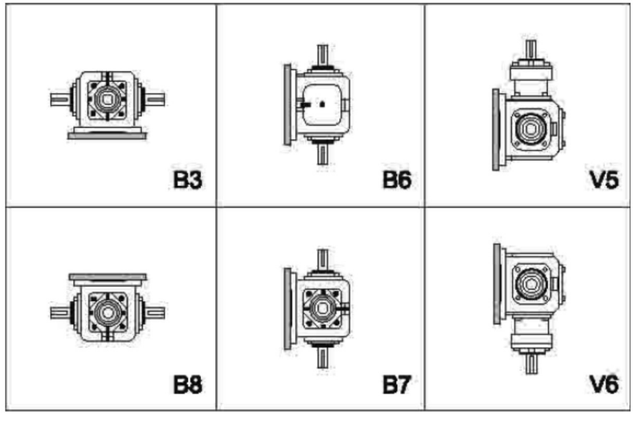

4.2 选型要素
Selection points

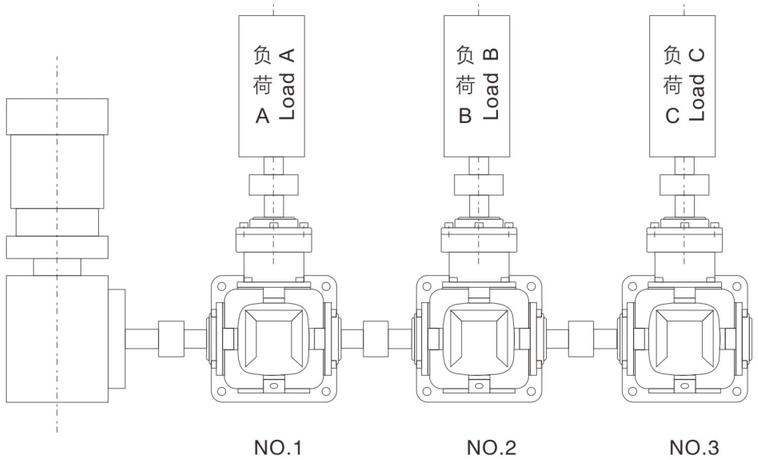

3台负载全部为196Nm，一般冲击，每天连续工作8小时，即使用系数fs=1.25，斜齿轮输入轴转速300r/min，速比全部为1:1。

根据公式：每台转向器本身所需的负载MN2≥M2×fs=196×1.25=245Nm

※1号转向器

因1号转向器本身的负载为245Nm，而2号、3号转向器需通过1号转向器传递扭矩。

所以1号转向器应承担的负载为：245Nm+ 245Nm+ 245Nm = 735Nm，依据传动能力表，应选JRTM12。

※2号转向器

除本身的负载245Nm，还需传递3号转向器的扭矩。所以总负载应为245Nm +245Nm =490Nm，依据传动能力表，应选JRTM10。

※3号转向器

由于仅一个负载C进行运转，即所需负载在245Nm 以上即可，依据传动能力表可选JRTM08。

Torque values of three gear reducers are 196Nm, uniform impulsire force, operate continuous for 8 hours per day, that is, useful factor fs=1.25,input speed of 300rpm, ratio of 1:1.

Calculate according to formula:

Required torque of any of gearbox MN2 is equal to 245Nm or larger.

No.1 gear reducer

No.1 gear reducer carry torque 245Nm, but No.2 and No.3 gear reducer need transfer torque through No.1,Consequently No.1 gear reducer should carry torque 735Nm(245Nm+245Nm+245Nm), select J-RTM12. according to transmission capacity table.

No.2 gear reducer

No.3 gear reducer still transfers torque of No.3gear reducer besides torque of245Nm, so, the total torq-ue is 490Nm (245Nm+245Nm), select JRTM10 according to transmission capacity table.

No.3 gear reducer

Required torque is more than 245Nm because of only load C according to transmission capacity Table select JRTM 08.

5. 技术参数
Technical Specifications

i_N	n1 (r/min)	JRTM02		JRTM04		JRTM06		JRTM07		JRTM08	
		M_{N2} (Nm)	P_{N_1} (kW)	M_{N2} (Nm)	P_{N_1} (kW)	M_{N2} (Nm)	P_{N_1} (kW)	M_{N2} (Nm)	P_{N_1} (kW)	M_{N2} (Nm)	P_{N_1} (kW)
1:1	1450	11.6	1.79	31.9	4.94	96.0	14.9	142	22.0	294	45.6
	1150	11.7	1.43	34.1	4.19	103	12.7	150	18.4	305	37.5
	870	12.1	1.12	37.2	3.46	113	10.5	164	15.2	312	29.0
	580	12.1	0.747	39.5	2.45	119	7.35	184	11.4	319	19.8
	400	12.3	0.524	40.2	1.72	122	5.20	195	8.34	326	14.0
	300	12.3	0.396	40.5	1.30	123	3.93	198	6.35	331	10.6
	200	12.4	0.226	41.2	0.880	124	2.66	201	4.30	338	7.23
	100	12.7	0.136	41.9	0.448	127	1.36	206	2.20	346	3.70
	10	13.0	0.014	43.0	0.046	132	0.141	214	0.228	361	0.386
1.5:1	1450					117	12.1	145	15.0	185	19.1
	1150					122	9.96	147	12.0	188	15.4
	870					123	7.66	150	9.30	191	11.8
	580					126	5.23	153	6.32	197	8.14
	400					128	3.66	155	4.41	200	5.70
	300					129	2.77	157	3.35	203	4.34
	200					131	1.87	160	2.28	204	2.91
	100					134	0.957	163	1.16	210	1.49
	10					139	0.099	169	0.12	218	0.155
2:1	1450	12.1	0.94	42.8	3.32	102	7.90	137	10.6	180	14.0
	1150	12	0.74	43.4	2.67	104	6.39	139	8.55	183	11.3
	870	12	0.56	43.8	2.04	105	4.88	141	6.56	187	8.70
	580	11.9	0.37	44.4	1.38	108	3.34	144	4.47	191	5.92
	400	12.2	0.26	45.1	0.96	109	2.33	146	3.12	194	4.15
	300	11.9	0.19	45.5	0.73	110	1.76	148	2.37	196	3.14
	200	12.2	0.13	46.1	0.49	111	1.18	149	1.59	198	2.12
	100	11.2	0.06	46.6	0.25	114	0.608	152	0.812	202	1.08
	10	28.1	0.015	48.5	0.026	116	0.062	157	0.084	209	0.112
2.5:1	1450					96.2	5.97	113	6.99	184	11.4
	1150					97.2	4.78	115	5.64	185	9.11
	870					99.0	3.68	116	4.30	188	7.00
	580					100.0	2.48	118	2.92	192	4.76
	400					100.9	1.73	120	2.05	195	3.34
	300					102.9	1.32	121	1.55	197	2.53
	200					103.9	0.888	123	1.05	200	1.71
	100					104.9	0.448	123	0.528	203	0.867
	10					107.8	0.046	126	0.054	208	0.089
3:1	1450					93.6	4.84	105	5.42	159	8.20
	1150					94.8	3.88	106	4.34	160	6.55
	870					95.9	2.97	108	3.34	163	5.04
	580					97.6	2.02	109	2.25	166	3.42
	400					99.0	1.41	111	1.58	168	2.39
	300					100	1.07	111	1.18	169	1.80
	200					100	0.712	113	0.803	171	1.22
	100					102	0.363	115	0.409	173	0.618
	10					104	0.037	118	0.042	179	0.064
4:1	1450					80.6	3.12	93.4	3.62	124	4.80
	1150					81.5	2.50	94.3	2.90	125	3.83
	870					82.4	1.92	95.9	2.23	127	2.95
	580					84.1	1.30	96.9	1.50	129	2.00
	400					85.1	0.91	98.7	1.05	131	1.40
	300					86.1	0.69	98.3	0.79	131	1.05
	200					86.0	0.46	101	0.54	134	0.71
	100					87.7	0.23	101	0.27	135	0.36
	10					89.3	0.02	101	0.03	140	0.04
5:1	1450					52.0	1.61	57.4	1.78	68.7	2.13
	1150					52.5	1.29	58.0	1.43	69.2	1.70
	870					53.2	0.99	59.0	1.10	70.4	1.31
	580					54.2	0.67	59.6	0.74	71.7	0.89
	400					54.9	0.47	60.7	0.52	72.6	0.62
	300					55.5	0.36	60.4	0.39	72.9	0.47
	200					55.4	0.24	61.7	0.26	74.1	0.32
	100					56.5	0.12	62.9	0.13	75.1	0.16
	10					57.6	0.01	64.5	0.01	77.8	0.02

1、横轴转速未达到10r/min时，请使用10r/min的数据。
2、▭ 以上有灰色标识的规格定货，横轴输入转速超过1450r/min时，请咨询杰牌。

i_N	n1 (r/min)	JRTM10		JRTM12		JRTM16		JRTM20		JRTM25	
		M_{N2} (Nm)	P_{N_1} (kW)	M_{N2} (Nm)	P_{N_1} (kW)	M_{N2} (Nm)	P_{N_1} (kW)	M_{N2} (Nm)	P_{N_1} (kW)	M_{N2} (Nm)	P_{N_1} (kW)
1:1	1450	421	65.3	619	96.0	1019	163				
	1150	453	55.7	665	81.1	1098	139	1842	234		
	870	479	44.6	726	67.5	1186	114	2009	193	3489	335
	580	493	30.6	802	49.7	1343	85.9	2274	145	3940	252
	400	504	21.5	821	35.1	1499	66.1	2538	112	4410	195
	300	513	16.4	835	26.8	1637	54.1	2744	90.8	4792	159
	200	521	11.1	852	18.2	1784	39.3	3126	69.0	5390	119
	100	535	5.72	875	9.36	1842	20.3	3205	35.3	5439	60.0
	10	561	0.599	919	0.983	1940	2.14	3205	3.53	5713	6.30
1.5:1	1450	374	38.7	564	58.3						
	1150	380	31.2	601	49.2						
	870	389	24.1	656	40.7						
	580	396	16.4	699	28.9						
	400	406	11.6	711	20.3						
	300	411	8.78	724	15.5						
	200	417	5.95	736	10.5						
	100	426	3.04	754	5.37						
	10	443	0.316	785	0.56						
2:1	1450	305	23.6	516	40.0	921	73.7	1578	126		
	1150	309	19.0	516	31.7	938	59.5	1607	102	3146	199
	870	315	14.6	516	24.0	958	46.0	1646	79.0	3224	155
	580	322	10.0	524	16.3	980	31.3	1695	54.2	3332	107
	400	328	7.02	538	11.5	1000	22.0	1725	38.0	3420	75.4
	300	332	5.33	543	8.71	1009	16.7	1754	29.0	3479	57.5
	200	338	3.61	551	5.89	1029	11.3	1784	19.7	3557	39.2
	100	344	1.84	563	3.01	1058	5.84	1833	10.1	3646	20.1
	10	357	0.191	586	0.313	1098	0.605	1921	1.06	3822	2.11
2.5:1	1450	293	18.2	507	31.4						
	1150	298	14.7	514	25.3						
	870	302	11.2	523	19.5						
	580	310	7.68	535	13.3						
	400	315	5.38	545	9.32						
	300	317	4.06	552	7.08						
	200	321	2.75	560	4.79						
	100	326	1.40	568	2.43						
	10	336	0.144	588	0.251						
3:1	1450	270	14.0	458	23.6	904	48.2	1529	82.3	2935	158
	1150	275	11.3	464	19.0	920	38.9	1561	66.6	3045	130
	870	279	8.66	469	14.6	940	30.1	1598	51.6	3135	101
	580	285	5.89	480	9.92	960	20.4	1644	35.4	3246	69.9
	400	288	4.11	490	6.98	978	14.4	1672	24.8	3317	49.3
	300	291	3.11	495	5.29	990	10.9	1701	18.9	3372	37.6
	200	294	2.10	501	3.57	1005	7.38	1733	12.9	3449	25.6
	100	300	1.07	510	1.82	1038	3.82	1777	6.60	3537	13.1
	10	308	0.110	527	0.188	1076	0.40	1865	0.69	3713	1.4
4:1	1450	241	9.35	434	16.8	850	34.3	1452	58.7	2798	113
	1150	246	7.54	441	13.5	865	27.7	1483	47.5	2892	92.6
	870	249	5.78	448	10.4	884	21.4	1518	36.8	2978	72.2
	580	254	3.93	456	7.07	902	14.6	1562	25.2	3084	49.8
	400	257	2.74	465	4.97	919	10.2	1588	17.7	3151	35.1
	300	259	2.08	470	3.77	930	7.8	1616	13.5	3204	26.8
	200	262	1.40	476	2.54	944	5.3	1646	9.17	3276	18.2
	100	267	0.71	485	1.30	976	2.7	1688	4.70	3360	9.36
	10	275	0.07	501	0.13	1011	0.3	1772	0.49	3527	0.98
5:1	1450	136	4.21	296	9.18	814	26.3	1391	44.9	2631	85.0
	1150	138	3.39	301	7.39	828	21.2	1420	36.4	2771	71.0
	870	140	2.60	305	5.68	847	16.4	1454	28.2	2853	55.3
	580	143	1.77	311	3.86	864	11.2	1496	19.3	2954	38.2
	400	144	1.23	318	2.72	881	7.85	1521	13.6	3018	26.9
	300	146	0.93	321	2.06	891	5.96	1548	10.3	3069	20.5
	200	148	0.63	325	1.39	905	4.03	1577	7.03	3138	14.0
	100	150	0.32	331	0.71	935	2.08	1617	3.60	3218	7.17
	10	155	0.03	342	0.07	969	0.22	1697	0.38	3378	0.75

1、If speed is less than 10rpm, please choose 10rpm.
2、 When order the model with ash sign or that input speed is more than 1450rpm, Please consult JIE for details.

JRTM 锥齿轮转向器径向力Fr(N)表
JRTM series Fr(N) table

i_N	n1 (r/min)	JRTM02		JRTM04		JRTM06		JRTM07		JRTM08		JRTM10		JRTM12		JRTM16		JRTM20		JRTM25	
		横轴 Input shaft	纵轴 Output shaft	横轴 Input shaft	纵轴 Output shaft	横轴 Input shaft	纵轴 Output shaft	横轴 Input shaft	纵轴 Output shaft	横轴 Input shaft	纵轴 Output shaft	横轴 Input shaft	纵轴 Output shaft	横轴 Input shaft	纵轴 Output shaft	横轴 Input shaft	纵轴 Output shaft	横轴 Input shaft	纵轴 Output shaft	横轴 Input shaft	纵轴 Output shaft
1:1	1450	265	216	833	951	1911	2450	2450	3136	3234	3381	4165	4508	5096	5586	10633	10976				
	1150	323	235	882	1029	2058	2597	2744	3234	3479	3626	4459	4851	5488	6076	11368	11760	15386	15608		
	870	402	255	960	1127	2205	2842	2989	3381	3773	3969	4851	5292	5880	6566	12446	12740	16660	17150	24794	25480
	580	549	314	1078	1323	2499	3185	3381	3822	4263	4459	5488	5880	6713	7301	14014	14504	18816	19404	28028	28910
	400	637	353	1372	1715	3185	3528	4018	4900	4851	5978	6272	7056	7742	8134	15680	16170	21070	21756	31360	32340
	300	696	392	1519	1960	3430	3528	4410	5537	5243	6958	6713	7987	8232	9065	17150	17640	23422	24108	34300	35280
	200	784	441	1911	1960	3430	3528	5096	6272	7889	8820	8575	9604	9261	10290	19600	19894	25970	26754	38612	39788
	100	980	588	1911	1960	3430	3528	5096	6272	8428	8820	9996	11760	11368	12593	22540	22540	28420	32928	39200	49000
	10	980	588	1911	1960	3430	3528	5096	6272	8428	8820	9996	11760	11858	14504	22540	22540	28420	33320	39200	49000
1.5:1	1450			1078	1960	2548	2842	3430	5390	4361	7987	5194	9212	5978	10486	5978	12152	7693	14602		
	1150			1078	1960	3038	3087	4067	5978	5096	8820	6174	10486	7252	12152	6419	13083	8771	17934	12985	24647
	870			1078	1960	3430	3332	4753	6076	6076	8820	7448	11760	8869	14504	6958	14210	9506	19453	13573	29400
2:1	580			1078	1960	3430	3528	5096	6174	7644	8820	9555	11760	11466	14504	7840	16072	10780	22001	15680	33222
2.5:1	400			1078	1960	3430	3528	5096	6272	8428	8820	9996	11760	11858	14504	8820	17934	12005	24598	17542	37142
3:1	300			1078	1960	3430	3528	5096	6272	8428	8820	9996	11760	11858	14504	9604	19600	13132	27342	19159	40474
	200			1078	1960	3430	3528	5096	6272	8428	8820	9996	11760	11858	14504	10829	22148	14798	30282	21658	45766
	100			1078	1960	3430	3528	5096	6272	8428	8820	9996	11760	11858	14504	13328	22540	18228	33320	26656	49000
	10			1078	1960	3430	3528	5096	6272	8428	8820	9996	11760	11858	14504	22540	22540	28420	33320	39200	49000

备注：各规格更低的输出转速按以上最大的Fr值。
Notes: If there is lower output speed， please choose the maximum Fr in the above table.

JRTM 产品重量
JRTM series weight table

Type	JRTM02	JRTM04	JRTM06	JRTM07	JRTM08	JRTM10	JRTM12	JRTM16	JRTM20	JRTM25
m(kg)	2	11	22.5	34	51	80	125	195	302	500

6. 安装尺寸
Mounting Dimensions

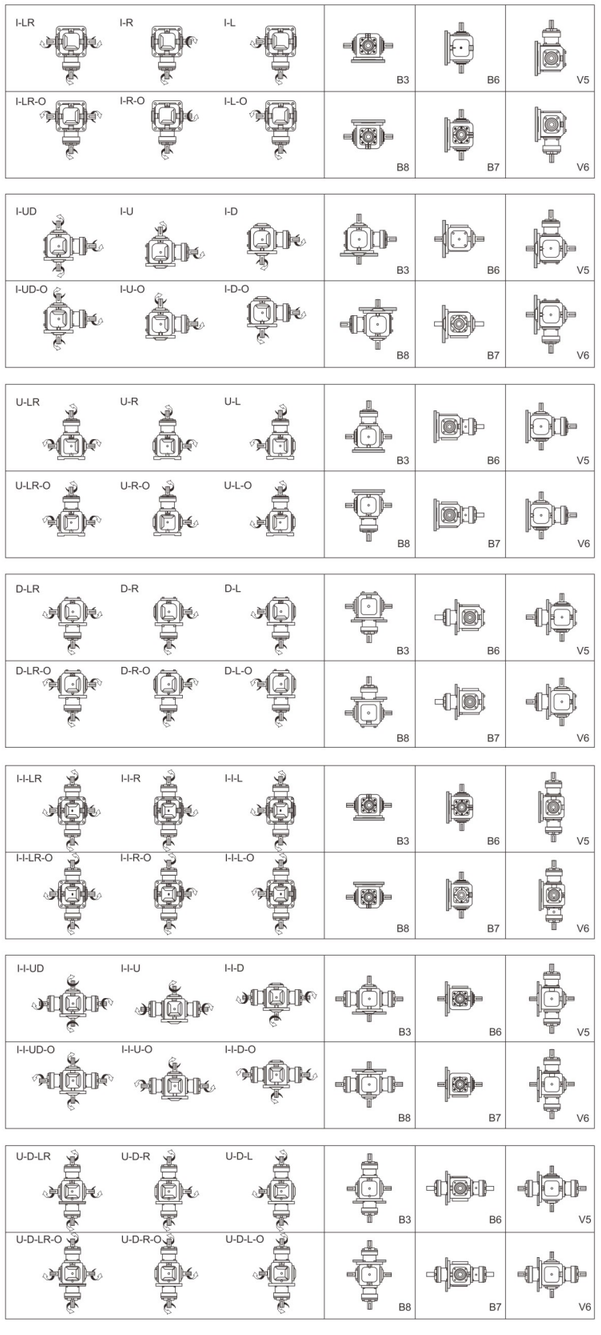

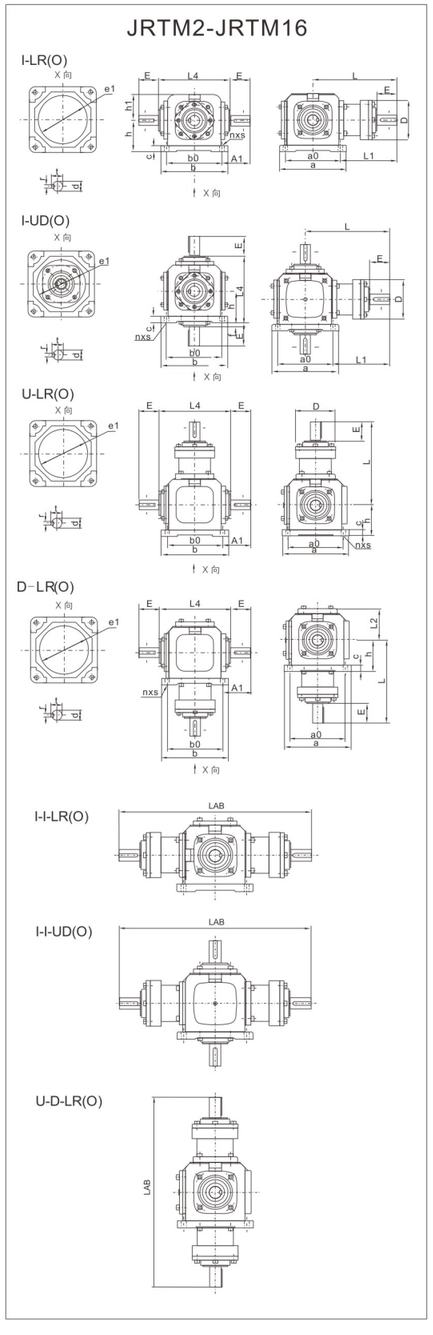

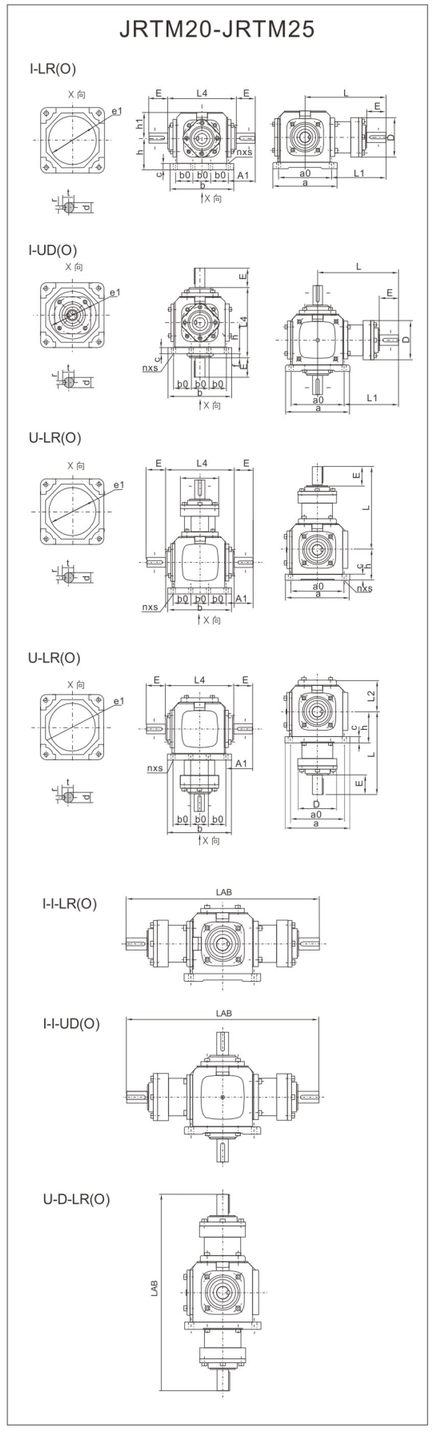

	JRTM2	JRTM4	JRTM6	JRTM7	JRTM8	JRTM10	JRTM12	JRTM16	JRTM20	JRTM25
A1	48	53.5	81	88	110.5	120	130	150	195	235
a	100	155	190	210	235	285	340	390	490	580
a0	84	125	152	174	195	240	290	330	430	520
b	100	155	190	210	235	285	340	390	410	480
b0	84	125	152	174	195	240	290	330	110	130
C	10	17	17	20	22	25	32	40	40	40
D	58	76	115	125	150	155	168	193	220	270
d(h7)	15	19	25	32	40	45	50	60	72	85
E	33	38	50	62	75	90	100	105	105	130
e1(H8)X深	94x3	155x5	190x5	220x5	250x5	305x5	370x5	420x7	360x10	430x10
f	5	2	17	13	18	10	0	10	10	10
h	52	76	90	100	115	140	175	200	245	290
h1	40	60	76	87	98	118	165	186	217	255
L	124	180	222	265	308	360	415	455	545	660
L1	82	117.5	146	178	210.5	240	270	290	330	400
L2	52	76	89.5	99	114.5	138	165	186	217	255
L4	114	156	214	226	266	300	350	420	510	600
LAB	/	360	444	530	616	720	830	/	/	/
n	4	4	4	4	4	4	4	4	8	8
r	5	6	8	10	12	14	14	18	20	22
s	9	10.5	14	14	14	16	21	21	21	24
t	17	21.5	28	35	43	48.5	53.5	64	76.5	90

7. 使用说明
Operating Instructions

7.1 安装注意事项
Notices of installation

7.1.1 减速机须安装在平整坚固的底座上，底脚螺栓必须紧固、防震。
The base-plate must be plane and stoutness, and the base-bolts must be screwed down and shockproof.

7.1.2 原动机 –– 减速机 –– 工作机的各联接轴伸，安装后必须互相准确对准轴线。
The connecting shafts of prime mover, reducer and operation device must be coaxial after installation.

7.1.3 减速机输入端及输出端轴伸外径尺寸公差均按 h6 制作，与之相配的联轴器、皮带轮、链轮等传动件内孔须按合适的尺寸公差配制，避免装配过紧损坏轴承，装配过松影响正常动力传递。
The diameter tolerance zone of input and output shafts is h6, the holes of fittings (such as couplings, belt-pulley, sprocket wheel and so on)must properly mate the shaft, which prevents bearing from breakage because of over-tight mate or avoid effecting normal power transmission because of over-loose mate.

7.1.4 链轮、齿轮等传动件装上轴伸时，应尽量靠近轴承，以减少轴伸弯曲应力。
Drivers such as sprocket wheel and gear must be fitted close to bearings in order to reduce bending stress of hanging shaft.

7.2 使用注意事项
Notices of usage

7.2.1 使用前应注意检查减速机型式结构、机座号、传动比、输入轴结构、输出轴结构、输入轴输出轴轴指向和回转方向是否符合使用要求。

Before using, please check carefully whether the reducer model, distance, transmission ratio, input connecting method, output shaft structure,input and output shaft direction and revolving direction accord with requirement.

7.2.2 出厂时减速机已加好润滑油，用户无须加油。首次运行500小时后请更换润滑油，以后每隔约2500小时或6个月这两者中较早的时间进行更换。
According to the requirement of " lubricant " in the product manual, please fill proper category and brand lub-ricant. And then screw on the vent-plug, uncork the small cone-plug of vent-plug. Only after doing these, reducer is ready for starting up running. The proper brand and adequate lubricant oil is required;replacing oil in time conforming to the request of product manual is also necessary, especially after using first 100 hours, it is required refilling new oil.

7.2.3 使用过程中发生不正常情况时，应及时停机检查，可参照“故障分析”表处理。(减速机的油温最高允许达到95℃，在此温度界限下，只要油温不再上升，可以放心使用）。
When abnormal circumstances occur, please stop and check reducer per "Malfunctions Analysis"(allowa-ble highest oil temperature is 95℃, under this temperature limit,if oil temperature no more goes up,please let reducer continue running).

7.3 转向功能
Function of rotation

1 横 轴 Input shaft		2 横 轴 Input shaft	
2轴2-extended shaft	3轴3-extended shaft	3轴3-extended shaft	4轴4-extended shaft
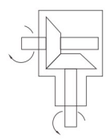			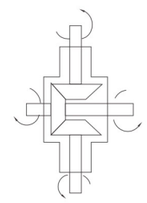

说明：当输入轴旋转方向改变，输出轴相应改变。
Specification:Direction of rotation of output shaft varies with that of input shaft.

7.4 转向功能注意事项(1:1传动比时无关系)
Pay attention to the ratio when fixing the input side (there is nothing in case of ratio of 1:1)

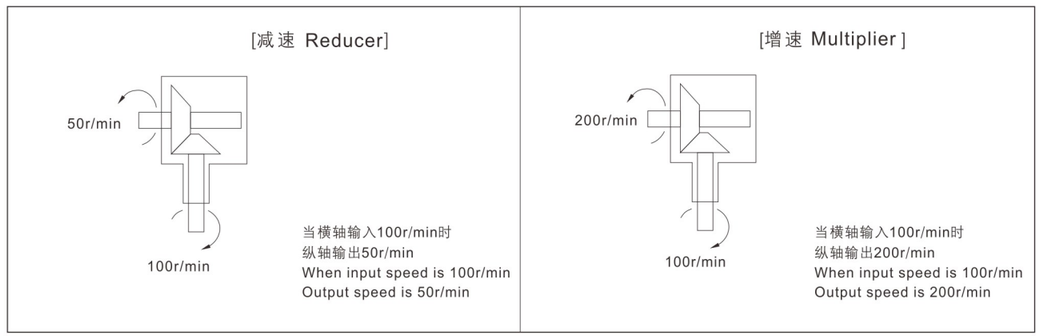

8. 油品润滑
Lubricant

8.1 润滑油选用表
Lubricants for reducer used in can be chosen as the table below

横轴转速 Input shaft speed (r/min)	周围温度 Environment temperature	
	–10℃~30℃	30℃~50℃
200~1450	ISO VG150	ISO VG200

横轴转速 Input shaft speed (r/min)	周围温度 Environment temperature	
	–10℃~30℃	30℃~50℃
< 200	ISO VG220	ISO VG320

8.2 润滑油注油量(L)
Lubricants capacity(L)

规格 Size	JRTM02	JRTM04	JRTM06	JRTM07	JRTM08	JRTM10	JRTM12	JRTM16	JRTM20	JRTM25
注油量 Lubricant capacity	0.15	0.9	1.2	2	2.8	5.2	8.6	11	22	40

注：因安装方式不同，油量会存在不一致，注油时结合油镜查看是否注油充足。
Annotate:If other faults not listed above occur,please contact with us at any moment,we will supply thorough consultation and service.

9. 故障分析
Malfunctions Analysis

故障情况 Fault Description	故障原因 Reasons	解决办法 Solutions
过 热 Overheating	原动机、减速机、工作机连接不当 Improper connection among prime mover, reducer and the operation device	调整至适当位置，使三者相联轴线同轴 Adjust to proper position
	超负荷运转 Overloading	适当调整负荷 Adjust to proper load
	油封过度磨擦 Over friction of oil seals	在油封唇口处滴润滑油 Drop lubricant at oil seal
	润滑油过少或过多 Lubricant oil overmuch or shortage	按油标指示点调整油量 Adjust to proper oil quantity as indication
	润滑油杂质多或润滑性差 Much impurity in oil or inferior oil	更换合适新油 Refill proper oil
振 动 Vibration	原动机、减速机、工作机固定不良 Prime mover, reducer and the operation device mount badly	查出固定不良部位，正确固紧 Find out the bad place,tighten it
	锥齿轮副齿部磨耗或损伤 Tooth surface of worm gear sets worn-out or damaged	更换锥齿轮副（需要时请咨询杰牌） Replace worm gear sets(we will cooperate with you when necessary)
	轴承磨损 Bearing worn-out	更换轴承 Replace Bearing
	螺栓松脱 Bolt loose	固紧螺栓 Tighten Screw
异 响 Noise	轴承损伤或间隙过大 Bearing damaged or too large clearance	更换轴承 Replace Bearing
	锥齿轮副啮合不良 Worm gear sets mesh badly	修整齿面或更换锥齿轮副（需要时请咨询杰牌） Mend tooth surface or replace worm gear sets (please contact to us)
	润滑油不足 Lubricant oil shortage	按油标指示点补加润滑油 Fill in adequate oil as indication
	机体内有异物 Foreign object in box	倒净润滑油带出异物，重加清洁润滑油 Discharge all the oil in order to put out foreign object, and refill clean oil
漏 油 Oil leakage	油封唇口磨损 Oil seal lip worn-out	更换油封 Replace oil seal
	油封档轴颈磨损 Shaft of oil seal area worn-out	更换输出轴或输入轴 Replace input or output shaft
	油量过多 Too much oil	按油标指示点调整油量 Discharge adequate oil as indication
	放油螺塞未旋紧 Oil screw plug loose	螺纹处加密封胶、旋紧螺塞 Tighten oil screw plug
	油标破损 Oil gauge damaged	更换油标 Replace oil gauge
锥齿轮副齿面磨损过快 Tooth surface of worm gear sets abrade extra-quickly	超负荷运转 Overload	调整至适当负荷 Adjust to proper loading
	润滑油不符合要求 Lubricant oil not according with requirement	更换合适的润滑油 Replace proper lubricant oil
	润滑油不足 Lubricant oil shortage	按油标指示点加足润滑油 Fill adequate oil as indication
	未按规定适时换油，润滑油劣化 Not replacing lubricant oil in time according to requirement, oil deteriorates	按规定要求适时换油 Replacing oil in time according to requirement
	运转温度过高 Overheating while running	1. 按“过热”故障处理 2. 采取合适措施，降低环境温度 1. Deal with it as "Overheating" 2. Adopting proper measures to make environment temperature fall

注：如果发生其他故障无法解决时，请咨询杰牌。
Annotate:If other faults not listed above occur,please contact with us at any moment,we will supply thorough consultation and service.

八. JRSFB82.5 纺机减速机
JRSFB 82.5 Spinning Gearbox

8.1 产品说明
Product Description

8.1.1 产品特点
Products characteristics

JRSFB82.5纺机减速机是杰牌自主研发用于纺织机械的专用减速机，该产品采用了良好的密封技术，用油润滑替代国外同类产品的脂润滑方式，蜗杆蜗轮副加工采用数控设备磨齿和滚齿技术，解决了纺织行业24小时使用减速机发热导致的寿命低问题，具有低噪声长寿命易维护高性能的特点。

JRSFB 82.5 Spinning Gearboxis the textile machine exclusive use products that we R&D independently. We use advanced sealing technology, taking grease instead of lubricant and choose numerical equipment, grinding and hobbing worm gear and worm shaft. All of these improve the products' longevity and reduce the noice.

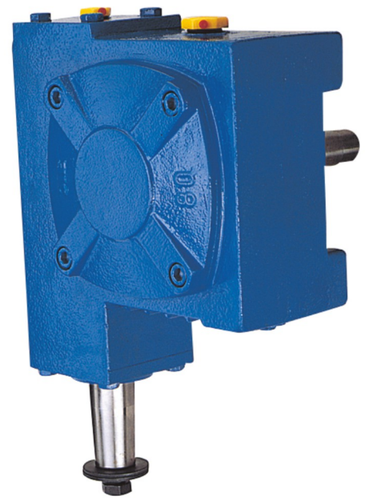

8.1.2 产品应用
Application

该产品主要应用于纺织行业倍捻机，是国内纺织机械替代进口的首选产品，现杰牌产品已广泛应用于纺织行业。

Products used in double-twisting machines, to be the first choice of substitution import in Textile industry. JIE products has been wildly used in textile industry.

8.2 主要参数
Main parameters

传动比 Transmission ratio	输入转速 Input speed	输入功率 Power	输出扭矩 Output torque
10	1500r/min	2.6kW	132Nm

8.3 产品外形安装图
Product Outline Drawing

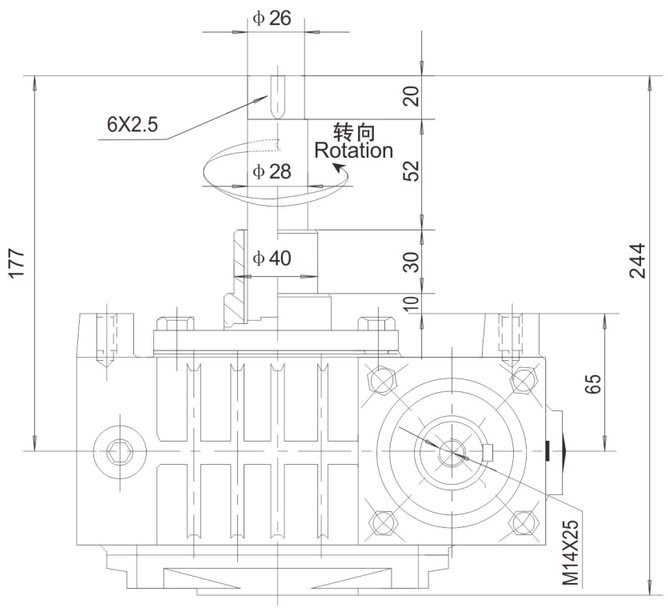

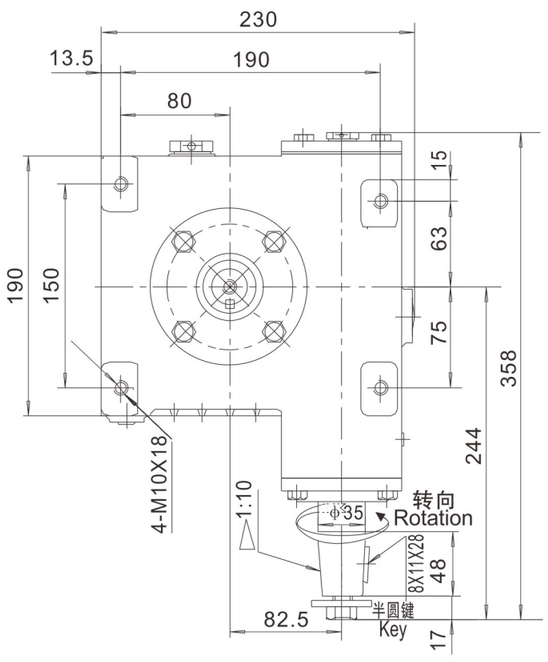

九. TWPX 油田减速机
TWPX Oilfield Gearbox

9.1 产品说明
Product Description

9.1.1 产品特点
Products characteristics

TWPX油田减速机是杰牌针对油田行业气候恶劣使用环境而自主研发的专用减速机，该产品具有以下特点：

TWPX Oilfield Gearbox is the oilfield exclusive use products that we developed independently. The main characteristics as follows:

蜗轮材料及铸造采用了专有技术，使产品寿命满足于油田使用工况；

Special worm gear material an d casting technology to insure the longevity of products.

产品油漆防护铸件表面采用了环氧富锌底漆，确保产品适应海洋、沙漠等气候恶劣环境使用。

Use epoxy primer in the face of cast, to insure the products could be used in the ocean, desert condition.

9.1.2 产品应用
Application

产品主要应用于石油、天然气等钻井搅拌设备。杰牌产品已大批量使用于国内知名油气田，同时也成功应用于俄罗斯、西亚等油田国家。

Products used in stir equipment of rock oil . natural gas drilling . JIE products have been widely used in domestic well-know oilfields , Russia and west Asia countries.

9.2 主要参数
Main parameters

详见第67页“技术参数”
See page 67 to check the technical parameters

9.3 产品外形安装图
Product Outline Drawing

TWPX 轴指向表示
SHAFT DIRECTION

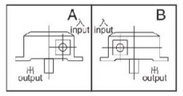

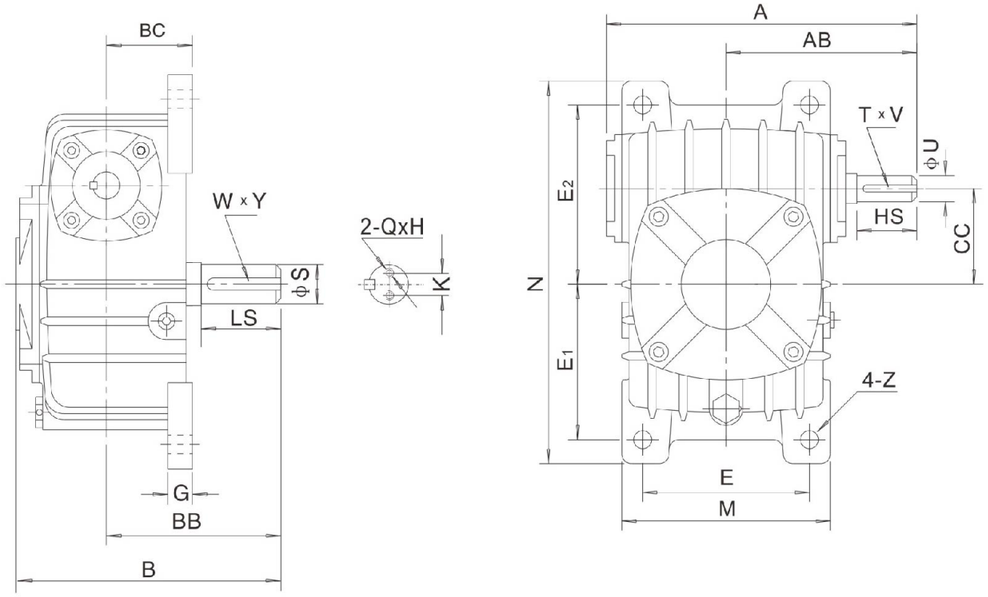

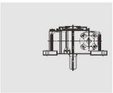

型号 size	传动比 ratio	A	AB	B	BB	BC	CC	M	N	E	E_1	E_2	G	Z	K	QxH	输入轴 Input Shaft			输出轴 Output Shaft			重量 weight (kg)
																	HS	U	T×V	LS	S	W×Y	
120	1/15 1/20 1/25	381	229	282	190	100	120	266	450	220	185	215	30	18	25	M8x15	65	30	8x4	85	45	14x5.5	50
135		433	260	317	210	110	135	306	495	260	210	235	30	18	30	M10x30	75	35	10x5	95	55	16x6	75
155		504	302	382	252	140	155	350	590	290	245	295	35	21	30	M10x30	85	40	12x5	110	60	18x7	115
175		545	325	402	262	150	175	394	640	320	267	323	40	21	35	M12x30	85	45	14x5.5	110	65	18x7	140
200		587	350	467	305	175	200	440	710	370	290	360	40	24	40	M12x30	95	50	14x5.5	125	70	20x7.5	200
250		705	420	552	360	200	250	510	860	440	350	440	45	28	50	M12x30	110	60	18x7	155	90	25x9	340

在专业化的路上走向胜利
On road to specialization strive together

陈 杰 词
Lyric: Chen Jie
钱建隆 曲
Music: Qian JianLong

1 =bE 4/4
稍快、朝气蓬勃地
allegretto, full of youth

‖:(111 111 111 1 | 111 111 111 1 | 51123456 | 5 555 1 0) |

5 1 1 2 3 1 0 | 5·4 3 2 3 1 0 | i·7 7 6 6 5 | 6 5 3 4 5 - |

要做 就做 一流 | 是 我 永恒 追求 | 产业 联 盟 | 我 们 一起 走
To be the star | is my eternal pursue | industrial union | we walk together
产业 事业 家业 | 共 同 富裕 和谐 | 目标 在 前 | 我 们 一起 走
Estate career family | harmonious with wealth | for the goal ahead | we walk together

5 1 1 2 3 1 0 | 5·4 3 2 3 1 0 | 1 i 7 6 | 5·4 3 4 2 1 |

聚 万物 之灵 | 造 天地 之杰 | 产 业 发 展 | 我 们 一起 走 啦
Nimbus from all beings | making it outstanding | industry developing | we walk together La
团结 创新 专业 | 推动 联盟 发展 | 胜 利 在 前 | 我 们 一起 走 啦
Join Innovation Expertise | enhancing the union | for the victory ahead | we walk together La

i - i i 7 i | 5 - - 1 | 6 - 6 6 7 i 3 - - - |

啦 | 啦 啦 啦 啦 | 啦 啦 | 啦 啦 啦 啦
La | La La La La | La La | La LaLa La
（节奏强烈、有冲击力）
(hot, powerful)

1 - 4 5 | 6·7 i 6 · 5 | 6 6 5·4 3 5 | 5 - - - |

在 专 业 化的 路 上 我们一起努力
On road to specialization we strive together

1 - 4 5 | 6·7 i 6 · 5 | 4 3 2·2 1 2 | 2 - - - |

在 专 业 化的 路 上 我们走向胜利
On road to specialization we go to victory

1 - 4 5 | 6·7 i 6 · 5 | 6 6 5·4 3 6 | 6 - - - |

在 专 业 化的 路 上 我们一起努力
On road to specialization we strive together

1 - 4 5 | 6·7 i 6 · 5 | 4 3 2·2 3 1 | 1 - - - :‖

在 专 业 化的 路 上 我们走向胜利
On road to specialization we go to victory

— 2

4 3 2·2 3 1 | 1 0 0 i | i - 0 0 | 0 0 0 0 ‖

我 们 走 向 胜 利 | 胜 利
we go to victory | Victory

杰牌智能传动方案目录

JIE INTELLIGENT DRIVE SOLUTIONS CATALOGUE

国家重点“小巨人”企业
浙江省重点企业研究院
浙江省“未来工厂”企业

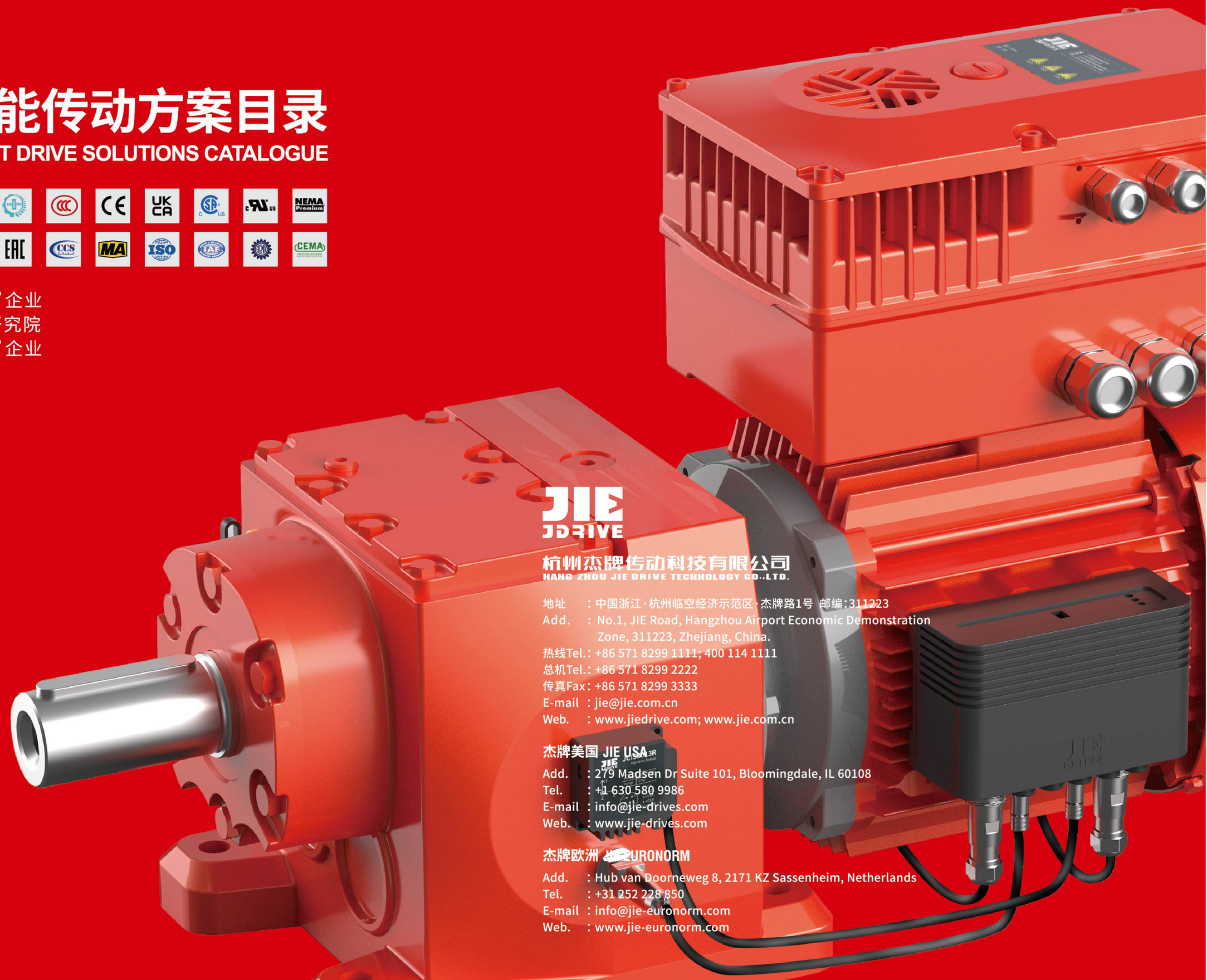

JIE DRIVE

杭州杰牌传动科技有限公司
HANG ZHOU JIE DRIVE TECHNOLOGY CO.,LTD.

地址　：中国浙江·杭州临空经济示范区·杰牌路1号　邮编：311223
Add.　：No.1, JIE Road, Hangzhou Airport Economic Demonstration Zone, 311223, Zhejiang, China.
热线Tel.：+86 571 8299 1111; 400 114 1111
总机Tel.：+86 571 8299 2222
传真Fax：+86 571 8299 3333
E-mail　：jie@jie.com.cn
Web.　：www.jiedrive.com; www.jie.com.cn

杰牌美国 JIE USA
Add.　：279 Madsen Dr Suite 101, Bloomingdale, IL 60108
Tel.　：+1 630 580 9986
E-mail　：info@jie-drives.com
Web.　：www.jie-drives.com

杰牌欧洲 JIE EURONORM
Add.　：Hub van Doorneweg 8, 2171 KZ Sassenheim, Netherlands
Tel.　：+31 252 228 850
E-mail　：info@jie-euronorm.com
Web.　：www.jie-euronorm.com

JRT 智能齿轮减速电机

JRTR
齿轮减速电机
规格：09~189
传动比：3.37~289.74
输入功率：0.12~250kW
输出扭矩：2.4~56494N.m

JRTF
平行轴-齿轮减速电机
规格：29~169
传动比：3.77~281.71
输入功率：0.12~250kW
输出扭矩：3.5~37125N.m

JRTK
锥齿轮-齿轮减速电机
规格：39~189
传动比：3.98~197.37
输入功率：0.12~200kW
输出扭矩：10~62800N.m

JRTS
蜗杆副-齿轮减速电机
规格：39~99
传动比：6.8~288
输入功率：0.12~22kW
输出扭矩：10~4900N.m

JRTW
蜗杆-面齿轮减速电机
规格：10~30
传动比：6.57~75
输入功率：0.09~1.1kW
输出扭矩：25~70N.m

JRH 智能工业齿轮箱

JRHH
平行轴齿轮箱
规格：3~28
传动比：1.25~450
输入功率：4.3~10515kW
输出扭矩：2300~1400000N.m

JRHB
直交轴齿轮箱
规格：4~28
传动比：5~400
输入功率：2.8~4908kW
输出扭矩：5500~1400000N.m

JRHD
斗提机齿轮箱
规格：5~16
传动比：25~71
输入功率：16~1305kW
输出扭矩：11000~173000N.m

JPOKE
棕榈油齿轮箱
规格：310
传动比：56、80
输入功率：106、141kW
输出扭矩：75000N.m

JRHA
空冷岛齿轮箱
规格：166
传动比：14
输入功率：228kW
输出扭矩：21000N.m

JRP 智能行星齿轮箱

JRP
行星齿轮箱
规格：9~36
传动比：25~4000
输入功率：0.4~12934kW
输出扭矩：22000~2600000N.m

JRP
行星齿轮箱
规格：01~8
传动比：3.08~3460
输入功率：0.02~192kW
输出扭矩：1000~13000N.m

JRPH
回转行星齿轮箱
规格：08~100
传动比：3.4~2000
输入功率：75~250kW
输出扭矩：8000~100000N.m

JRP RV
同心轴行星减速机
速比：3~100
背隙：1~3/3~5/5~7arc-min
扭矩：6~3300N.m

JRP RE
直角轴行星减速机
速比：3~100
背隙：4~9/6~11arc-min
扭矩：12~1920N.m

JRW 高效蜗杆减速机

JRSTD
IEC高效蜗杆减速机
规格：25~150
传动比：5~100
输入功率：0.06~15kW
输出扭矩：2.6~1760N.m

JRWND
NEMA高效蜗杆减速机
规格：30~150
传动比：5~100
输入功率：0.06~15kW
输出扭矩：2.6~1760N.m

JRSTED
双级蜗杆减速机
规格：25/30~63/150
传动比：150~5000
输入功率：0.06~1.5kW
输出扭矩：73~2670N.m

JRKM、JRKB
准双曲面齿轮减速机
规格：28~68
传动比：7.5~300
输入功率：0.07~11.1kW
输出扭矩：12~886N.m

WPEDS
双级蜗杆减速机
规格：40/70～155/250
传动比：100～3600
输入功率：0.12～5.5KW
输出扭矩：63～6050N.m

JD 高效电机

JDC　　JCS
伺服电机　伺服驱动器
功率：0.4~7.5kW
输出扭矩：1.27~48N.m
供电：1AC220V/3AC380V
通讯：脉冲、EtherCAT、Profinet

JDL
异步伺服电动机
扭矩：2.5~325N.m
转速：1200r/min~3000r/min
惯量：4.9~4300kgcm²

JD-IEC
IEC电机
规格：63~315
功率：0.12~200kW
能效：IE3、IE4、IE5

JD-NEMA
NEMA电机
规格：56C~365TC
功率：0.16~75HP
能效：NEMA Premium

JD-B
防爆电机
规格：80~315
功率：0.75~200kW
防爆等级：Exib II BT4
能效：IE3、IE4、IE5

JC 智能传动方案

JC
智能传动方案
减速机+电动机+变频器
+传感器+物联网

JCMB
变频一体减速电机
规格：175~255
功率：0.75~5.5kW
供电：3AC 380~440V
输出频率：0~200Hz
通讯接口：
ModbusRTU、Profinet、ASi

JCI
智能监测系统
供电：AC220V, DC24V
通讯接口：Wifi, 4G, RS485
功能：能耗管理、健康管理、
视听管理、运维管理、
配件管理
部署方式：公有云、私有云

JCME
分布式变频器
规格：175~255
功率：0.75~5.5kW
供电：3*AC380~440V
输出频率：0~200Hz
通讯接口：
Profinet, ModbusRTU, ASi

JCF
变频器
规格：175~355
功率：0.75~55kW
供电：1*AC220/3*AC400V
通讯接口：
Profinet, EtherCAT, CANOPEN

其他传动设备

JRES(R、K)
不锈钢齿轮减速电机
规格：37~67
传动比：3.41~199.81
输入功率：0.18~7.5kW
输出扭矩：12~910N.m

JRESS
不锈钢蜗杆减速电机
规格：30~90
传动比：5~100
输入功率：0.09~4kW
输出扭矩：19~458N.m

JRTH、JRTV
齿轮减速电机
规格：18~60
传动比：3~1800
输入功率：0.1~7.5kW
输出扭矩：1.6~3292N.m

JRSS
丝杆升降机
规格：35~150
传动比：5~40
输入功率：0.19~16.3kW
起升力：500~26050kg

JRTM
锥齿轮转向器
规格：02~25
传动比：1~5
输入功率：0.014~335kW
输入转速：10~1450r/min

JRGC
工程分动箱
规格：0401、1501
传动比：0.589、0.659、0.756、0.825
输出泵最大扭矩：1.6~3292N.m
行走最大扭矩：40000N.m

JN
农机齿轮箱
传动比：0.5862~2.0625
输入转速：750r/min
效率：≥96%

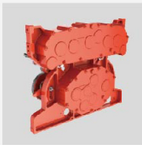

JPF
纺纱机罗拉齿轮箱
规格：1706~2012
速比：3.04~33.568
功率：1.5~3kW
扭矩：110~272N.m

JEC
扶梯主机
规格：2-15, 2-25
传动比：24.5
效率：≥96%
使用寿命：146000h
输出扭矩：3530~5150N.m

杰牌智能传动方案提供商
更多产品敬请扫码了解

杰牌智能传动产业平台 JIE Intelligent Drive Industrial Platform

杰牌应用智能产品、建设智能工厂、生产智能产品，为用户提供智能产品、智能服务、智能体验，打造产业平台、实现合作共赢。

Using intelligent products, to build intelligent plants and produce intelligent products, serving customers with intelligent products, intelligent services and intelligent expericences. To build a industrial platform and achieve win-win cooperation.

杰牌智能传动生态系统 JIE Intelligent Drive Ecosystem

杰牌从供应链管理、创新链整合、产业链发展、价值链协同到生态链建设，通过三百千万工程“培养优秀员工、整合优秀供应商、服务优秀客户”，推进战略合作、实现五链互联。

JIE focuses on supply chain management, innovation chain integration, industrial chain development, value chain collaboration, and ecological chain construction. Through the "Three Hundred Million Project," which aims to "cultivate outstanding employees, integrate outstanding suppliers, and serve outstanding customers," the company promotes strategic cooperation and achieves interconnection among the five chains.

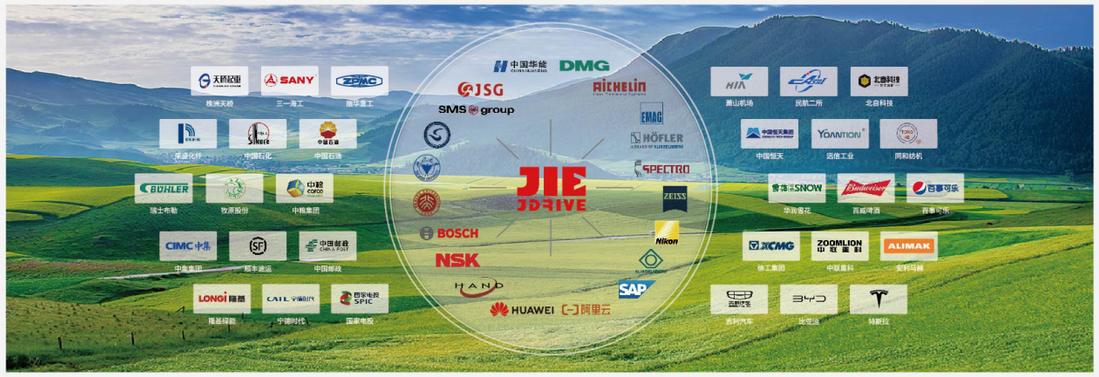

杰牌智能传动研究院+创新中心+未来工厂 JIE Intelligent Drive Research Institute + Innovation Center + Future Factory

杰牌智能传动研究院+创新中心+未来工厂“111”创新发展模式：以一院为引领，打造人才高地，实现自主可控；以一心为平台，构建产业生态，实现五链互联；以一厂为基础，聚焦专精特新，实现隐形冠军。

JIE Intelligent Drive Research Institute + Innovation Center + Future Factory "111" Innovation and Development Model: Led by one institute to create a talent highland and achieve independent control; with one center as the platform to build an industrial ecosystem and achieve interconnection of the five chains; based on one factory, focusing on specialization, refinement, uniqueness, and innovation to become a hidden champion.

杰牌智能传动数字产品 JIE Intelligent Drive Digital Products

杰牌智能传动“131“数字产品体系：1个方案—杰牌智能传动方案；3个平台—杰牌新智造平台、杰牌大数据平台、杰牌智能化平台；1个场景—杰牌未来工厂场景；包括JRT智能齿轮减速电机、JRH智能工业齿轮箱、JRP智能行星齿轮箱、JRW高效蜗杆减速机、JD高效电机、JC智能传动方案等产品和服务。杰牌致力于为好客户、做好产品、建好团队！

JIE Intelligent Drive “131” Digital Product System: 1 Solution—JIE Intelligent Drive Solution; 3 Platforms—JIE Intelligent Manufacturing Platform, JIE Big Data Platform and JIE Intellectualization Platform; 1 Scenario—JIE Intelligent Factory Scenario, incl. JRT Intelligent Gearmotors, JRH Intelligent Industrial Gear Units, JRP Intelligent Planetary Gear Units, JRW High-efficiency Worm Reducers, JD High-efficiency Motors, JC Intelligent Drive Solutions. JIE is dedicated to serving great customers with great products and providing excellent services with a great team.

中国制造中心 全球装配工厂 China Manufacturing Center Global Assembly Plant

杰牌立足中国市场、出口欧美市场、服务全球市场；杰牌中国、杰牌美国、杰牌欧洲，为全球客户提供本土化服务、面对面服务、一对一服务。打造百年杰牌、成就幸福家庭！

JIE bases itself on the Chinese market, exports to EU & US market and serves the global market. JIE CHINA, JIE USA, JIE EURONORM, JIE is dedicated to making great products for great customers across the world through Localized service, Face-to-face service and One-to-one service. Create a century-old JIE and achieve more happy families.

杰牌智能传动平台产品 Platform Products of JIE Intelligent Dirve

产品标准化实现平台化，工艺标准化实现自动化，流程标准化实现信息化。

Standardizing the products to realize platformization, standardizing the techonologies to realize automation, standardizing the processes to realize informatization.

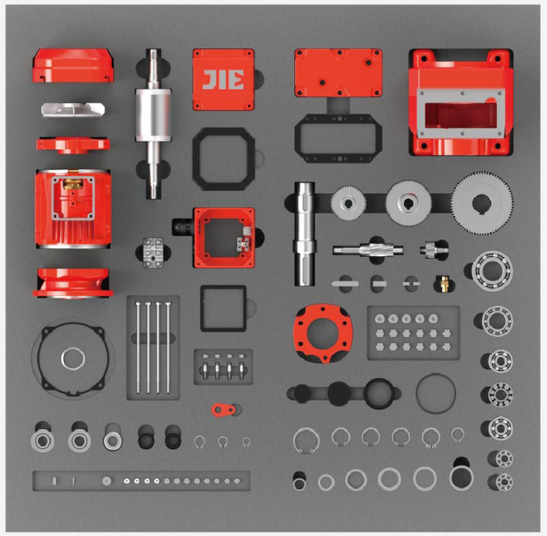

杰牌智能传动未来工厂场景应用 JIE Intelligent Drive Situational Application

杰牌智能中央立库、箱体智能工厂、齿轮智能工厂、电机智能工厂、装配智能工厂、智能检测试验等智能传动方案。

JIE Applications incl. Intelligent drive solutions incl. Intelligent Central Stereoscopic Warehouse, Intelligent Plant of Housings, Intelligent Plant of Gears, Intelligent Plant of Motors, Intelligent Plant of Assembly and Intelligent Tests, etc.

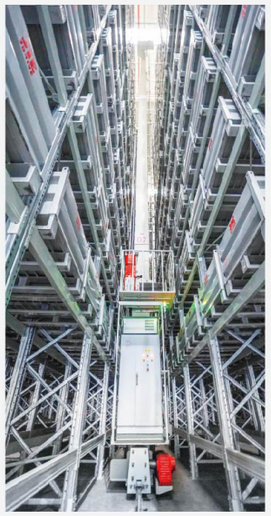

堆垛机—杰牌智能传动方案
JIE Intelligent Drive Solutions for Stackers

RGV—杰牌智能传动方案
JIE Intelligent Drive Solutions for RGVs

输送线—杰牌智能传动方案
JIE Intelligent Drive Solutions for Transmission Lines

升降机—杰牌智能传动方案
JIE Intelligent Drive Solutions for Elevators

清洗线—杰牌智能传动方案
JIE Intelligent Drive Solutions for Cleaning Lines

热处理线—杰牌智能传动方案
JIE Intelligent Drive Solutions for Heat Treatment Lines

电机绕嵌线—杰牌智能传动方案
JIE Intelligent Drive Solutions for Motors Winding & Embedding

产品总装线—杰牌智能传动方案
JIE Intelligent Drive Solutions for Product Assembly Lines

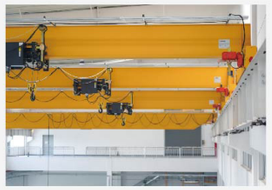

起重机—杰牌智能传动方案
JIE Intelligent Drive Solutions for Cranes

工业吊扇—杰牌智能传动方案
JIE Intelligent Drive Solutions for Industrial Ceiling Fans

杰牌智能传动美丽厂区 JIE Intelligent Drive Beautiful Factory

杰牌打造“环境友好型、发展持续型、服务全球型”的“专精特新”企业。

To build a "Professional, Fine, Specialized & Novel" enterprise of "Environment-friendly, Sustainable and Global service".

智造未来 / 未来已来 智造未来
Intelligent-made for Future

专业主义 / 因专业 而杰出
Professionalism

立足中国 / 二十世纪 立足中国
Based in China

风生水起 / 风生水起 风调雨顺
Windmill & Fountain

幸福广场 / 享受工作 享受生活
Happiness Square

服务全球 / 廿一世纪 服务全球
Serve the World

十全十美 / 十全十美 精益求精
Towards Perfection

彩虹之上 / 彩虹之上 梦想启航
Over the Rainbow

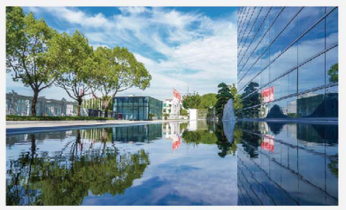

钱塘潮涌 / 奔竞不息 勇立潮头
Tides of Qiantang

百年传承 / 百年传承 厚德载物
Create a century-old JIE